This is a free page sample. Access the full version online.

NSAI Standards

Irish Standard
I.S. EN ISO 4231:2016

Hand- and machine-operated circular screwing dies for parallel pipe threads - G series (ISO 4231:2016)

© CEN 2016 No copying without NSAI permission except as permitted by copyright law.

This is a free page sample. Access the full version online.

I.S. EN ISO 4231:2016

Incorporating amendments/corrigenda/National Annexes issued since publication:

The National Standards Authority of Ireland (NSAI) produces the following categories of formal documents:

I.S. xxx: Irish Standard — national specification based on the consensus of an expert panel and subject to public consultation.

S.R. xxx: Standard Recommendation — recommendation based on the consensus of an expert panel and subject to public consultation.

SWiFT xxx: A rapidly developed recommendatory document based on the consensus of the participants of an NSAI workshop.

This document replaces/revises/consolidates the NSAI adoption of the document(s) indicated on the CEN/CENELEC cover/Foreword and the following National document(s):

NOTE: The date of any NSAI previous adoption may not match the date of its original CEN/CENELEC document.

This document is based on:	*Published:*
EN ISO 4231:2016	2016-11-30

This document was published under the authority of the NSAI and comes into effect on:	ICS number:
2016-12-18	25.100.50
	NOTE: If blank see CEN/CENELEC cover page

NSAI	T +353 1 807 3800	Sales:
1 Swift Square,	F +353 1 807 3838	T +353 1 857 6730
Northwood, Santry	E standards@nsai.ie	F +353 1 857 6729
Dublin 9	W NSAI.ie	W standards.ie

Údarás um Chaighdeáin Náisiúnta na hÉireann

This is a free page sample. Access the full version online.

National Foreword

I.S. EN ISO 4231:2016 is the adopted Irish version of the European Document EN ISO 4231:2016, Hand- and machine-operated circular screwing dies for parallel pipe threads - G series (ISO 4231:2016)

This document does not purport to include all the necessary provisions of a contract. Users are responsible for its correct application.

Compliance with this document does not of itself confer immunity from legal obligations.

In line with international standards practice the decimal point is shown as a comma (,) throughout this document.

This is a free page sample. Access the full version online.

This page is intentionally left blank

This is a free page sample. Access the full version online.

EUROPEAN STANDARD

NORME EUROPÉENNE

EUROPÄISCHE NORM

EN ISO 4231

November 2016

ICS 25.100.50

Supersedes EN 24231:1989

English Version

Hand- and machine-operated circular screwing dies for parallel pipe threads - G series (ISO 4231:2016)

Filières rondes de filetage, à main et à machine, pour filetages cylindriques de tuyauterie - Série G (ISO 4231:2016)

Runde Hand- und Maschinen-Schneideisen für zylindrisches Rohrgewinde - Reihe G (ISO 4231:2016)

This European Standard was approved by CEN on 24 September 2016.

CEN members are bound to comply with the CEN/CENELEC Internal Regulations which stipulate the conditions for giving this European Standard the status of a national standard without any alteration. Up-to-date lists and bibliographical references concerning such national standards may be obtained on application to the CEN-CENELEC Management Centre or to any CEN member.

This European Standard exists in three official versions (English, French, German). A version in any other language made by translation under the responsibility of a CEN member into its own language and notified to the CEN-CENELEC Management Centre has the same status as the official versions.

CEN members are the national standards bodies of Austria, Belgium, Bulgaria, Croatia, Cyprus, Czech Republic, Denmark, Estonia, Finland, Former Yugoslav Republic of Macedonia, France, Germany, Greece, Hungary, Iceland, Ireland, Italy, Latvia, Lithuania, Luxembourg, Malta, Netherlands, Norway, Poland, Portugal, Romania, Slovakia, Slovenia, Spain, Sweden, Switzerland, Turkey and United Kingdom.

EUROPEAN COMMITTEE FOR STANDARDIZATION
COMITÉ EUROPÉEN DE NORMALISATION
EUROPÄISCHES KOMITEE FÜR NORMUNG

CEN-CENELEC Management Centre: Avenue Marnix 17, B-1000 Brussels

© 2016 CEN All rights of exploitation in any form and by any means reserved worldwide for CEN national Members.

Ref. No. EN ISO 4231:2016 E

This is a free page sample. Access the full version online.

Contents

Page

European foreword **3**

This is a free page sample. Access the full version online.

European foreword

This document (EN ISO 4231:2016) has been prepared by Technical Committee ISO/TC 29 "Small tools".

This European Standard shall be given the status of a national standard, either by publication of an identical text or by endorsement, at the latest by May 2017, and conflicting national standards shall be withdrawn at the latest by May 2017.

Attention is drawn to the possibility that some of the elements of this document may be the subject of patent rights. CEN [and/or CENELEC] shall not be held responsible for identifying any or all such patent rights.

This document supersedes EN 24231:1989.

According to the CEN-CENELEC Internal Regulations, the national standards organizations of the following countries are bound to implement this European Standard: Austria, Belgium, Bulgaria, Croatia, Cyprus, Czech Republic, Denmark, Estonia, Finland, Former Yugoslav Republic of Macedonia, France, Germany, Greece, Hungary, Iceland, Ireland, Italy, Latvia, Lithuania, Luxembourg, Malta, Netherlands, Norway, Poland, Portugal, Romania, Slovakia, Slovenia, Spain, Sweden, Switzerland, Turkey and the United Kingdom.

Endorsement notice

The text of ISO 4231:2016 has been approved by CEN as EN ISO 4231:2016 without any modification.

This is a free page sample. Access the full version online.

This page is intentionally left blank

This is a free page sample. Access the full version online.

INTERNATIONAL STANDARD

ISO 4231

Third edition
2016-10-15

Hand- and machine-operated circular screwing dies for parallel pipe threads — G series

Filières rondes de filetage, à main et à machine, pour filetages cylindriques de tuyauterie — Série G

Reference number
ISO 4231:2016(E)

© ISO 2016

This is a free page sample. Access the full version online.

COPYRIGHT PROTECTED DOCUMENT

© ISO 2016, Published in Switzerland

All rights reserved. Unless otherwise specified, no part of this publication may be reproduced or utilized otherwise in any form or by any means, electronic or mechanical, including photocopying, or posting on the internet or an intranet, without prior written permission. Permission can be requested from either ISO at the address below or ISO's member body in the country of the requester.

ISO copyright office
Ch. de Blandonnet 8 • CP 401
CH-1214 Vernier, Geneva, Switzerland
Tel. +41 22 749 01 11
Fax +41 22 749 09 47
copyright@iso.org
www.iso.org

This is a free page sample. Access the full version online.

Contents

Page

Foreword ..... **iv**

1 Scope **1**

2 Dimensions **1**

3 Marking **2**

Annex A (informative) **Relationship between designations in this International Standard and ISO 13399** **3**

Bibliography **4**

© ISO 2016 – All rights reserved

This is a free page sample. Access the full version online.

Foreword

ISO (the International Organization for Standardization) is a worldwide federation of national standards bodies (ISO member bodies). The work of preparing International Standards is normally carried out through ISO technical committees. Each member body interested in a subject for which a technical committee has been established has the right to be represented on that committee. International organizations, governmental and non-governmental, in liaison with ISO, also take part in the work. ISO collaborates closely with the International Electrotechnical Commission (IEC) on all matters of electrotechnical standardization.

The procedures used to develop this document and those intended for its further maintenance are described in the ISO/IEC Directives, Part 1. In particular the different approval criteria needed for the different types of ISO documents should be noted. This document was drafted in accordance with the editorial rules of the ISO/IEC Directives, Part 2 (see www.iso.org/directives).

Attention is drawn to the possibility that some of the elements of this document may be the subject of patent rights. ISO shall not be held responsible for identifying any or all such patent rights. Details of any patent rights identified during the development of the document will be in the Introduction and/or on the ISO list of patent declarations received (see www.iso.org/patents).

Any trade name used in this document is information given for the convenience of users and does not constitute an endorsement.

For an explanation on the meaning of ISO specific terms and expressions related to conformity assessment, as well as information about ISO's adherence to the World Trade Organization (WTO) principles in the Technical Barriers to Trade (TBT) see the following URL: www.iso.org/iso/foreword.html.

The committee responsible for this document is ISO/TC 29, *Small tools*, Subcommittee SC 9, *Tools with defined cutting edges, cutting items*.

This third edition cancels and replaces the second edition (ISO 4231:1987), of which it constitutes a minor revision with the following changes:

— Annex A has been added;

— a Bibliography has been added.

© ISO 2016 – All rights reserved

This is a free page sample. Access the full version online.

Hand- and machine-operated circular screwing dies for parallel pipe threads — G series

1 Scope

This International Standard is a supplement to ISO 2568 and ISO 4230 and specifies the dimensions of hand- and machine-operated circular screwing dies intended for production of parallel pipe threads, G series, in accordance with ISO 228-1.

The general dimensions of these dies (diameter, thickness and fixing dimensions) are in accordance with ISO 2568 so as to permit the driving of hand-operated dies with the aid of the die stocks defined in that document.

2 Dimensions

The general dimensions are shown in Figure 1 and given in Table 1.

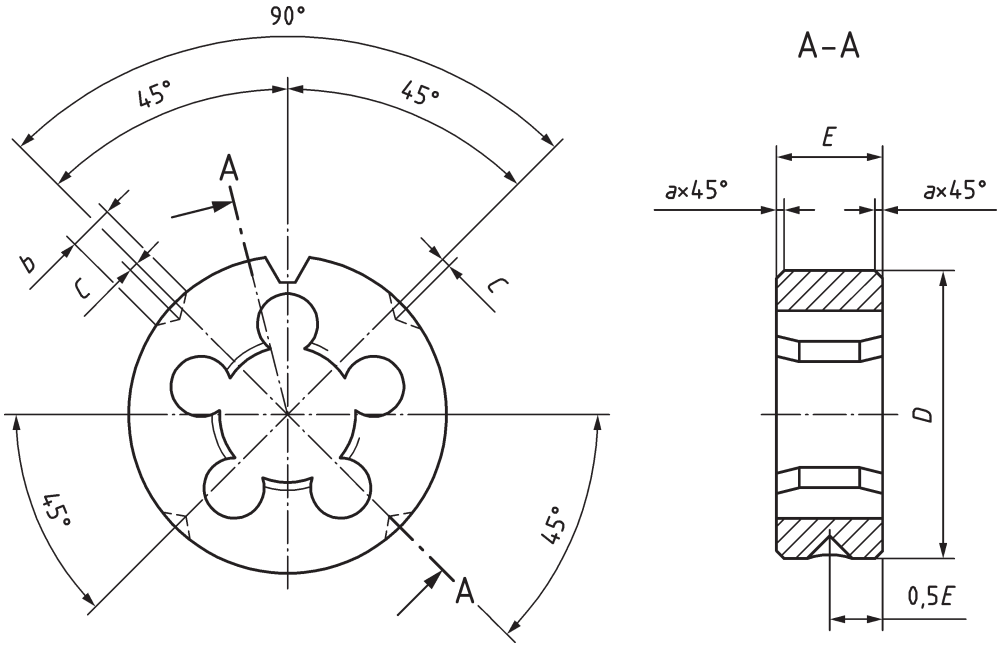

Figure 1

Table 1

Dimensions in millimetres

Thread designation	Basic diameter	Pitch ≈	*D*	*E*	*C*	*b*	*a*
1/16	7,723	0,907	25	9	0,8	5	0,5
1/8	9,728	0,907	30	11	1	5	1
1/4	13,157	1,337	38	10	1,2	6	1
3/8	16,662	1,337	45	14	1,2	6	1
1/2	20,955	1,814	45	14	1,2	6	1
5/8	22,911	1,814	55	16	1,5	8	1

© ISO 2016 – All rights reserved

SAI GLOBAL

This is a free preview. Purchase the entire publication at the link below:

Product Page

Looking for additional Standards? Visit Intertek Inform Infostore

Learn about LexConnect, All Jurisdictions, Standards referenced in Australian legislation