This is a free page sample. Access the full version online.

NSAI Standards

Irish Standard
I.S. EN 15969-1:2017

Tanks for transport of dangerous goods - Digital interface for the data transfer between tank vehicle and with stationary facilities - Part 1: Protocol specification - Control, measurement and event data

© CEN 2017 No copying without NSAI permission except as permitted by copyright law.

This is a free page sample. Access the full version online.

I.S. EN 15969-1:2017

Incorporating amendments/corrigenda/National Annexes issued since publication:

The National Standards Authority of Ireland (NSAI) produces the following categories of formal documents:

I.S. xxx: Irish Standard — national specification based on the consensus of an expert panel and subject to public consultation.

S.R. xxx: Standard Recommendation — recommendation based on the consensus of an expert panel and subject to public consultation.

SWiFT xxx: A rapidly developed recommendatory document based on the consensus of the participants of an NSAI workshop.

This document replaces/revises/consolidates the NSAI adoption of the document(s) indicated on the CEN/CENELEC cover/Foreword and the following National document(s):

NOTE: The date of any NSAI previous adoption may not match the date of its original CEN/CENELEC document.

This document is based on:	*Published:*
EN 15969-1:2017	2017-12-13

This document was published under the authority of the NSAI and comes into effect on:	ICS number:
2017-12-31	35.240.60
	NOTE: If blank see CEN/CENELEC cover page

NSAI	T +353 1 807 3800	Sales:
1 Swift Square,	F +353 1 807 3838	T +353 1 857 6730
Northwood, Santry	E standards@nsai.ie	F +353 1 857 6729
Dublin 9	W NSAI.ie	W standards.ie

Údarás um Chaighdeáin Náisiúnta na hÉireann

This is a free page sample. Access the full version online.

National Foreword

I.S. EN 15969-1:2017 is the adopted Irish version of the European Document EN 15969-1:2017, Tanks for transport of dangerous goods - Digital interface for the data transfer between tank vehicle and with stationary facilities - Part 1: Protocol specification - Control, measurement and event data

This document does not purport to include all the necessary provisions of a contract. Users are responsible for its correct application.

For relationships with other publications refer to the NSAI web store.

Compliance with this document does not of itself confer immunity from legal obligations.

In line with international standards practice the decimal point is shown as a comma (,) throughout this document.

This is a free page sample. Access the full version online.

This page is intentionally left blank

This is a free page sample. Access the full version online.

EUROPEAN STANDARD

NORME EUROPÉENNE

EUROPÄISCHE NORM

EN 15969-1

December 2017

ICS 35.240.60

Supersedes EN 15969-1:2015

English Version

Tanks for transport of dangerous goods - Digital interface for the data transfer between tank vehicle and with stationary facilities - Part 1: Protocol specification - Control, measurement and event data

Citernes destinées au transport de matières dangereuses - Interface numérique pour le transfert de données entre des véhicules-citernes et des installations fixes - Partie 1: Spécifications du protocole - Contrôle, données de mesure et d'événements

Tanks für die Beförderung gefährlicher Güter - Digitale Schnittstelle für den Datenaustausch zwischen Tankfahrzeugen und stationären Einrichtungen - Teil 1: Protokollspezifikation - Steuerungs-, Mess- und Ereignisdaten

This European Standard was approved by CEN on 15 October 2017.

CEN members are bound to comply with the CEN/CENELEC Internal Regulations which stipulate the conditions for giving this European Standard the status of a national standard without any alteration. Up-to-date lists and bibliographical references concerning such national standards may be obtained on application to the CEN-CENELEC Management Centre or to any CEN member.

This European Standard exists in three official versions (English, French, German). A version in any other language made by translation under the responsibility of a CEN member into its own language and notified to the CEN-CENELEC Management Centre has the same status as the official versions.

CEN members are the national standards bodies of Austria, Belgium, Bulgaria, Croatia, Cyprus, Czech Republic, Denmark, Estonia, Finland, Former Yugoslav Republic of Macedonia, France, Germany, Greece, Hungary, Iceland, Ireland, Italy, Latvia, Lithuania, Luxembourg, Malta, Netherlands, Norway, Poland, Portugal, Romania, Serbia, Slovakia, Slovenia, Spain, Sweden, Switzerland, Turkey and United Kingdom.

EUROPEAN COMMITTEE FOR STANDARDIZATION
COMITÉ EUROPÉEN DE NORMALISATION
EUROPÄISCHES KOMITEE FÜR NORMUNG

CEN-CENELEC Management Centre: Avenue Marnix 17, B-1000 Brussels

© 2017 CEN All rights of exploitation in any form and by any means reserved worldwide for CEN national Members.

Ref. No. EN 15969-1:2017 E

This is a free page sample. Access the full version online.

Contents

Page

European foreword ... 4

Introduction ... 6

1 Scope ... 7

2 Normative references ... 7

3 Terms and definitions, abbreviations and conventions ... 7
3.1 Terms and definitions ... 7
3.2 Abbreviations ... 9
3.3 Conventions ... 9

4 Hardware interface ... 10

5 Basic protocol layer ... 10
5.1 FTL-frame (frame) ... 10
5.2 Frame flow (handshake) ... 11
5.3 Delay and timeout ... 16
5.4 CRC16 Checksum ... 16

6 Data protocol layer (FTL-data protocol) ... 16
6.1 Client (OBC) and server (TVE) ... 16
6.2 Syntax of data in datagrams ... 17
6.3 Nodes, subnodes, variables ... 18
6.4 Format identifiers ... 18
6.5 Types of variable values ... 21
6.6 Kinds of nodes ... 21

7 FTL-Data ... 23
7.1 General ... 23
7.2 Record and field types ... 23
7.3 Systemwide variables (subnode SYSTEM) ... 23
7.4 Variables related to global positioning system (subnode GPS) ... 26
7.5 Accessing a printer on TVE-side (subnode PRN) ... 27
7.6 Compartment information (subnode COMP) ... 30
7.7 Notification about changes (subnode NOTIFY) ... 31
7.8 Information about driver (subnode DRIVER) ... 32
7.9 Information about the vehicle (variable VEHICLE_ID) ... 33
7.10 Information about current operation (subnode OPERATION) ... 33
7.11 Access to filesystem on TVE (subnode FS) ... 35
7.12 Auxiliary (subnode AUX) ... 39
7.13 Order management (subnode ORDER) ... 40
7.14 Goods and service database (subnode PRODUCT) ... 44
7.15 FTL—logfile (subnodes LOG) ... 47
7.16 Required variables ... 78
7.17 NAK ID ... 78

8 Routing for multiple TVE ... 79
8.1 Purpose ... 79
8.2 Routing solution ... 79
8.3 Routing example ... 80

This is a free page sample. Access the full version online.

9 Communication with office 81
9.1 General 81
9.2 Simple file transfer 81
9.3 FTL over TCP/IP 83
10 Communication Examples 85
10.1 Examples for Basic Protocol Layer level 85
10.2 Examples for data protocol layer 87
Annex A (normative) Node tree 90
Annex B (normative) Test FTL 91
B.1 Overview 91
B.2 Basic Protocol Layer 91
B.2.1 Frame Tests 91
B.2.2 CRC-error 92
B.2.3 Delay and Timeout 92
B.3 Data Protocol Layer 92
B.3.1 Test of Toggling 92
B.3.2 Test of the FTL data layer 93
B.3.3 Test of the required FTL nodes 94
B.3.4 Optional System Subnodes 97
B.3.5 Optional Node Prn 99
B.3.6 Node Comp 101
B.4 Application Layer 107
B.4.1 Test of the L-File 107
B.4.2 Test of the LH-File 107
B.4.3 Test for the Filling of the NodeList 107
B.4.4 Sequence Test 108
Bibliography 110

This is a free page sample. Access the full version online.

European foreword

This document (EN 15969-1:2017) has been prepared by Technical Committee CEN/TC 296 "Tanks for the transport of dangerous goods", the secretariat of which is held by AFNOR.

This European Standard shall be given the status of a national standard, either by publication of an identical text or by endorsement, at the latest by June 2018, and conflicting national standards shall be withdrawn at the latest by June 2018.

Attention is drawn to the possibility that some of the elements of this document may be the subject of patent rights. CEN shall not be held responsible for identifying any or all such patent rights.

This document supersedes EN 15969-1:2015.

With regard to EN 15969-1:2015, the following fundamental changes are given:

— fields for air craft refilling added.

EN 15969, *Tanks for transport of dangerous goods — Digital interface for the data transfer between tank vehicle and with stationary facilities*, consists of 2 parts:

— *Part 1: Protocol specification — Control, measurement and event data*;

— *Part 2: Commercial and logistic data*.

This European Standard forms part of a coherent standards programme comprising the following standards:

— EN 13616-1, *Overfill prevention devices for static tanks for liquid fuels — Part 1: Overfill prevention devices with closure device*;

— EN 13616-2, *Overfill prevention devices for static tanks for liquid fuels — Part 2: Overfill prevention devices without a closure device*;

— EN 13922, *Tanks for transport of dangerous goods — Service equipment for tanks — Overfill prevention systems for liquid fuels*;

— EN 14116, *Tanks for transport of dangerous goods — Digital interface for product recognition devices for liquid fuels*;

— EN 15207, *Tanks for the transport of dangerous goods — Plug/socket connection and supply characteristics for service equipment in hazardous areas with 24 V nominal supply voltage*;

— EN 15208, *Tanks for transport of dangerous goods — Sealed parcel delivery systems — Working principles and interface specifications*;

— EN 15969-2, *Tanks for transport of dangerous goods — Digital interface for the data transfer between tank vehicle and with stationary facilities — Part 2: Commercial and logistic data*.

According to the CEN/CENELEC Internal Regulations, the national standards organizations of the following countries are bound to implement this European Standard: Austria, Belgium, Bulgaria, Croatia, Cyprus, Czech Republic, Denmark, Estonia, Finland, Former Yugoslav Republic of Macedonia,

This is a free page sample. Access the full version online.

France, Germany, Greece, Hungary, Iceland, Ireland, Italy, Latvia, Lithuania, Luxembourg, Malta, Netherlands, Norway, Poland, Portugal, Romania, Serbia, Slovakia, Slovenia, Spain, Sweden, Switzerland, Turkey and the United Kingdom.

This is a free page sample. Access the full version online.

Introduction

FTL is an acronym for **F**uel **T**ruck **L**ink, the interface between electronic system(s) on board of a tank vehicle (tank-vehicle-equipment) and any external computer, e.g. an on-board-computer installed in the driver's cabin; for illustration see Figure 1.

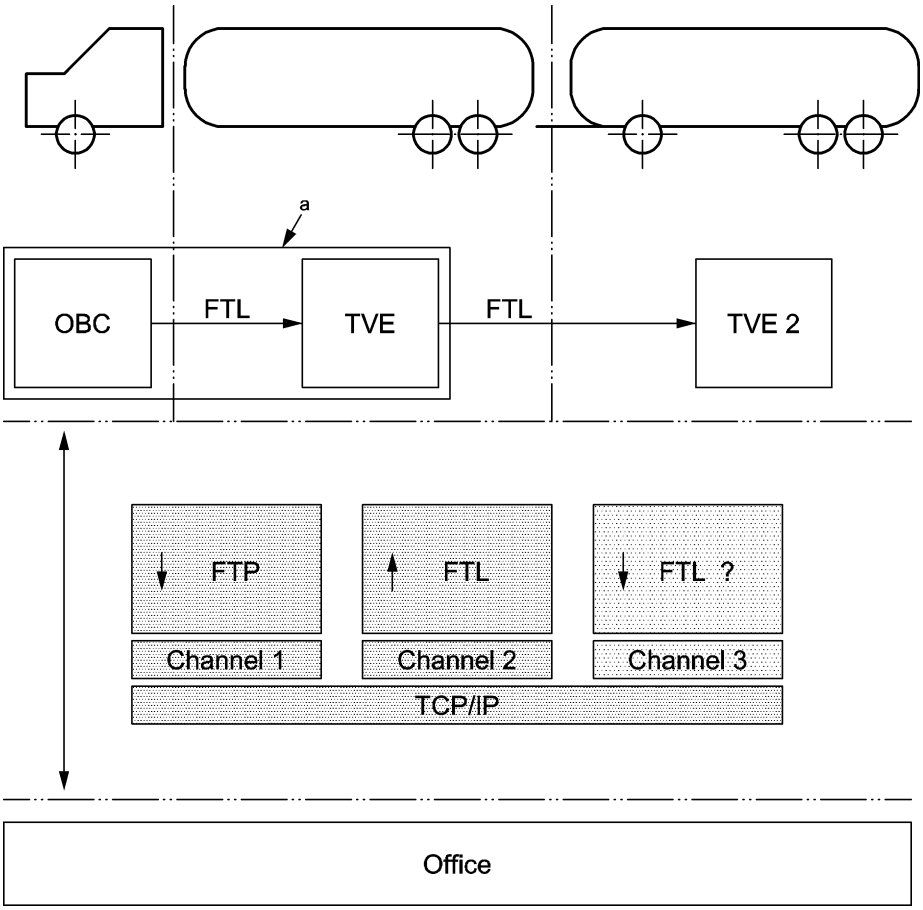

Key

→ direction of communication (client → server)

a may be either two independent units or one single unit which incorporates both functions OBC and TVE

Figure 1

This is a free page sample. Access the full version online.

1 Scope

This European Standard specifies data protocols and data format for the interfaces between electronic equipment (TVE), on-board computer (OBC) of the tank vehicle and stationary equipment for all interconnecting communication paths.

This European Standard specifies the basic protocol FTL used in the communication (basic protocol layer), the format and structure of FTL-data to be transmitted (data protocol layer) and describes the content of the FTL-data.

This data protocol may be used for other application e.g. between stationary tank equipment and offices.

2 Normative references

The following documents, in whole or in part, are normatively referenced in this document and are indispensable for its application. For dated references, only the edition cited applies. For undated references, the latest edition of the referenced document (including any amendments) applies.

EN 13616-2, *Overfill prevention devices for static tanks for liquid fuels — Part 2: Overfill prevention devices without a closure device*

EN 13922, *Tanks for transport of dangerous goods — Service equipment for tanks — Overfill prevention systems for liquid fuels*

EN 14116:2012+A1:2014, *Tanks for transport of dangerous goods — Digital interface for product recognition devices for liquid fuels*

EN 15208:2014, *Tanks for transport of dangerous goods — Sealed parcel delivery systems — Working principles and interface specifications*

EN 15969-2:2017, *Tanks for transport of dangerous goods — Digital interface for the data transfer between tank vehicle and with stationary facilities — Part 2: Commercial and logistic data*

ISO 639-1, *Codes for the representation of names of languages — Part 1: Alpha-2 code*

ISO/IEC 10646:2014, *Information technology — Universal Coded Character Set (UCS)*

DIN 51757:2011, *Testing of mineral oils and related materials — Determination of density*

3 Terms and definitions, abbreviations and conventions

For the purposes of this document, the following terms and definitions, abbreviations and conventions apply.

3.1 Terms and definitions

3.1.1
downgrade
intentional loading and discharge of a higher grade product (substance) into a lower grade product of the same group

3.1.2
answer time
time between last frame character transmitted from OBC (client) and first character frame received from TVE (server)

SAI GLOBAL

This is a free preview. Purchase the entire publication at the link below:

Product Page

Looking for additional Standards? Visit Intertek Inform Infostore

Learn about LexConnect, All Jurisdictions, Standards referenced in Australian legislation