This is a free page sample. Access the full version online.

AS/NZS 62026.5:2001
IEC 62026-5:2000

Australian/New Zealand Standard™

Low-voltage switchgear and controlgear—Controller-device interfaces (CDIs)

Part 5: Smart distributed system (SDS)

Standards Australia
STANDARDS NEW ZEALAND

This is a free page sample. Access the full version online.

This Joint Australian/New Zealand Standard was prepared by Joint Technical Committee EL-006, Industrial Switchgear and Controlgear. It was approved on behalf of the Council of Standards Australia on 21 March 2001 and on behalf of the Council of Standards New Zealand on 4 May 2001. It was published on 5 June 2001.

The following interests are represented on Committee EL-006:

Australasian Railway Association
Australian Chamber of Commerce and Industry
Australian Electrical and Electronic Manufacturers Association
Bureau of Steel Manufacturers of Australia
Electrical Contractors Association of New Zealand
Electricity Supply Association of Australia
Independent Electrical Switchboard Manufacturers Association
Institution of Engineers Australia
Ministry of Economic Development New Zealand
National Electrical and Communications Association
Testing Interests (Australia)
WorkCover N. S. W.

Keeping Standards up-to-date

Standards are living documents which reflect progress in science, technology and systems. To maintain their currency, all Standards are periodically reviewed, and new editions are published. Between editions, amendments may be issued. Standards may also be withdrawn. It is important that readers assure themselves they are using a current Standard, which should include any amendments which may have been published since the Standard was purchased.

Detailed information about joint Australian/New Zealand Standards can be found by visiting the Standards Australia web site at www.standards.com.au or Standards New Zealand web site at www.standards.co.nz and looking up the relevant Standard in the on-line catalogue.

Alternatively, both organizations publish an annual printed Catalogue with full details of all current Standards. For more frequent listings or notification of revisions, amendments and withdrawals, Standards Australia and Standards New Zealand offer a number of update options. For information about these services, users should contact their respective national Standards organization.

We also welcome suggestions for improvement in our Standards, and especially encourage readers to notify us immediately of any apparent inaccuracies or ambiguities. Please address your comments to the Chief Executive of either Standards Australia International or Standards New Zealand at the address shown on the back cover.

This Standard was issued in draft form for comment as DR 00326.

This is a free page sample. Access the full version online.

Australian/New Zealand Standard™

Low-voltage switchgear and controlgear—Controller-device interfaces (CDIs)

Part 5: Smart distributed system (SDS)

First published as AS/NZS 62026.5:2001.

COPYRIGHT

© Standards Australia/Standards New Zealand

All rights are reserved. No part of this work may be reproduced or copied in any form or by any means, electronic or mechanical, including photocopying, without the written permission of the publisher.

Jointly published by Standards Australia International Ltd, GPO Box 5420, Sydney, NSW 2001 and Standards New Zealand, Private Bag 2439, Wellington 6020

ISBN 0 7337 3866 4

This is a free page sample. Access the full version online.

PREFACE

This Standard was prepared by the Joint Standards Australia/Standards New Zealand Committee EL-006, Industrial Switchgear and Controlgear.

The objective of this Standard is to specify requirements for interfaces between control devices and switching elements, normal service conditions for devices, constructional and performance requirements and tests to verify conformance to requirements.

This Standard is Part 5 of a series which, when complete, will consist of the following:

AS/NZS

62026 Low-voltage switchgear and controlgear—Controller-device interfaces (CDIs)

62026.1 Part 1: General rules

62026.2 Part 2: Actuator sensor interface (AS-i)

62026.3 Part 3: DeviceNet

62026.5 Part 5: Smart distributed system (SDS) (This Standard)

62026.6 Part 6: Seriplex (Serial multiplexed control Bus)

This Standard is identical with and has been reproduced from IEC 62026-5:2000, *Low-voltage switchgear and controlgear—Controller-device interfaces (CDIs)—Part 5: Smart distributed system (SDS)*.

This Standard covers controller-device interfaces for control systems, factory automation and material handling including devices such as limit switches, proximity sensors, electro-pneumatic valves, relays, motor-starters, operator interface panels, analogue inputs, analogue outputs and controllers.

The provisions of the general rules in AS/NZS 62026.1 are applicable to this Joint Australian/New Zealand Standard, where specifically called for. General rules clauses and subclauses thus applicable, as well as tables, figures and annexes, are identified by reference to Part 1 of the IEC Standard from which this Standard is reproduced, for example subclause 7.2.4.1 of IEC 62026-1.

The smart distributed system (SDS) is intended for use in, but is not limited to, controller-device interfaces for control systems, factory automation and material handling. These applications may include devices such as limit switches, proximity sensors, electro-pneumatic valves, relays, motor-starters, operator interface panels, analogue inputs, analogue outputs and controllers.

SDS provides for the connection of intelligent devices such as sensors, actuators and other components to one or more controllers. SDS functionality may be integrated directly into the devices or be in modules allowing the connection of conventional components to the network.

SDS consists of one or more controllers connected to up to 126 logical devices. In addition to the process data, SDS allows for the transmission of parameters and diagnostic data. The data exchange may be either event-driven or cyclical.

Topology is typically a single trunk with short branches using a cable comprising two shielded, twisted pairs with a common earth wire within a single jacket.

Data can be transmitted at rates of 125 kbit/s, 250 kbit/s, 500 kbit/s and 1 Mbit/s with maximum system trunk lengths of 457 m, 182 m, 91 m and 22 m respectively.

This is a free page sample. Access the full version online.

Figure 1 shows an example of an SDS controller-device interface.

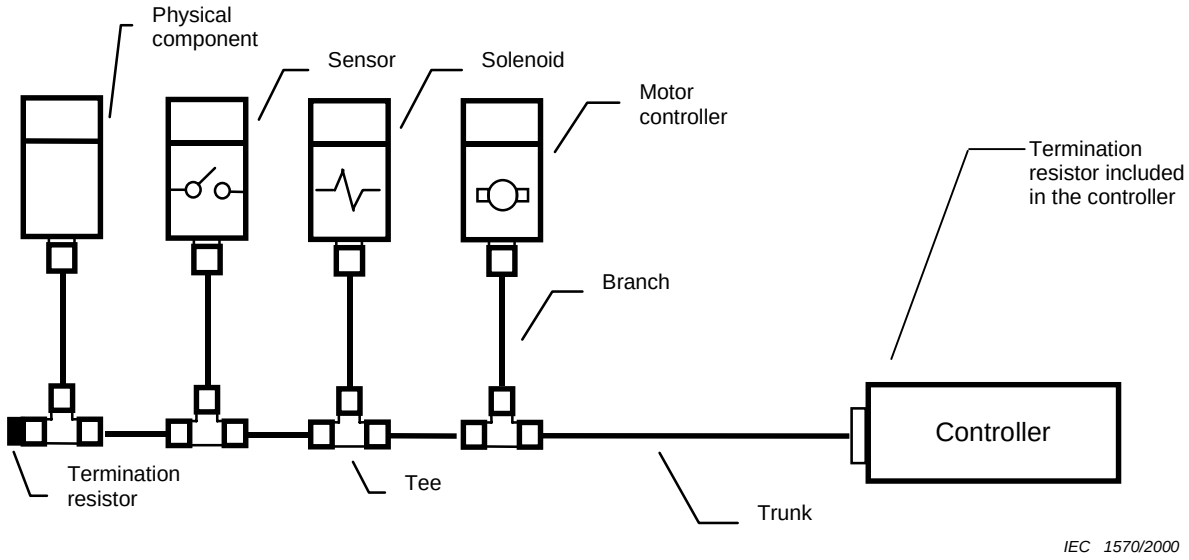

Figure 1 – Example of an SDS controller-device interface scope

A reference to an International Standard identified in the Normative References Clause by strikethrough (~~example~~) is replaced by a reference to the Australian or Australian/New Zealand Standard(s) listed immediately thereafter and identified by shading (example). Where the struck-through referenced document and the referenced Australian or Australian/New Zealand Standard are identical, this is indicated in parenthesis after the title of the latter.

As this Standard is reproduced from an International Standard, the following applies:

(a) Its number does not appear on each page of text and its identity is shown only on the cover and title page.

(b) In the source text ‘this standard’ should read ‘this Australian/New Zealand Standard’.

(c) A full point should be substituted for a comma when referring to a decimal marker.

SAI GLOBAL

This is a free preview. Purchase the entire publication at the link below:

Product Page

Looking for additional Standards? Visit Intertek Inform Infostore

Learn about LexConnect, All Jurisdictions, Standards referenced in Australian legislation