This is a free page sample. Access the full version online.

AS 1359.46—1988

Australian Standard®

ROTATING ELECTRICAL MACHINES— GENERAL REQUIREMENTS

Part 46— BRUSHES, BRUSH-HOLDERS, COMMUTATORS, AND SLIP-RINGS– GLOSSARY OF TERMS

This is a free page sample. Access the full version online.

This Australian Standard was prepared by Committee EL/9, Rotating Electrical Machinery. It was approved on behalf of the Council of the Standards Association of Australia on 30 March 1988 and published on 15 August 1988.

The following interests are represented on Committee EL/9:

Australian British Chamber of Commerce
Australian Electrical and Electronic Manufacturers' Association
Bureau of Steel Manufacturers of Australia
Confederation of Australian Industry
Department of Defence
Electricity Supply Association of Australia
Institution of Engineers, Australia

Review of Australian Standards. *To keep abreast of progress in industry, Australian Standards are subject to periodic review and are kept up to date by the issue of amendments or new editions as necessary. It is important therefore that Standards users ensure that they are in possession of the latest edition, and any amendments thereto.*

Full details of all Australian Standards and related publications will be found in the Standards Australia Catalogue of Publications; this information is supplemented each month by the magazine 'The Australian Standard', which subscribing members receive, and which gives details of new publications, new editions and amendments, and of withdrawn Standards.

Suggestions for improvements to Australian Standards, addressed to the head office of Standards Australia, are welcomed. Notification of any inaccuracy or ambiguity found in an Australian Standard should be made without delay in order that the matter may be investigated and appropriate action taken.

This Standard was issued in draft form for comment as DR 87238.

This is a free page sample. Access the full version online.

AS 1359.46—1988

Australian Standard®

ROTATING ELECTRICAL MACHINES— GENERAL REQUIREMENTS

Part 46— BRUSHES, BRUSH-HOLDERS, COMMUTATORS, AND SLIP-RINGS— GLOSSARY OF TERMS

First published as AS 1359.46–1988.

PUBLISHED BY STANDARDS AUSTRALIA
(STANDARDS ASSOCIATION OF AUSTRALIA)
1 THE CRESCENT, HOMEBUSH, NSW 2140

ISBN 0 7262 5101 1

This is a free page sample. Access the full version online.

PREFACE

This Standard was prepared by the Association's Committee on Rotating Electrical Machinery.

In the preparation of this Standard, reference was made to IEC 276 (1968), *Definitions and nomenclature for carbon brushes, brush-holders, commutators and slip-rings*, and to Amendment No. 1, January 1987, thereto; also to IEC 560 (1977), *Definitions and terminology of brush-holders for electrical machines*. Acknowledgement is made of the assistance received from these publications.

This Standard follows the IEC publications very closely, however the terminology in other languages, and USA terminology have been omitted. In addition the material has been rearranged, expanded and edited for clarity.

Each term included has a reference number. Except for terms in the 700 and 800 series, the reference numbers are identical to those in IEC 276.

CONTENTS

		Page
1	SCOPE	3
2	DEFINITIONS	3
2.1	Hard carbon	3
2.2	Carbon-graphite	3
2.3	Natural graphite	3
2.4	Electrographite	3
2.5	Metal-graphite	3
2.6	Metal-impregnated graphite	3
2.7	Resin-bonded (material)	3
2.8	Brush-holder	3
3	TERMINOLOGY	4
3.1	Brushes (Terms 101 to 155)	4
3.2	Tops (Terms 201 to 205)	9
3.3	Flexibles and connections (Terms 301 to 306)	10
3.4	Terminals (Terms 401 to 406)	10
3.5	Commutators and slip-rings (Terms 501 to 512)	11
3.6	Commutator marking (Terms 601 to 611)	12
3.7	Arrangement of brushes (Terms 701 to 709)	13
3.8	Brush-holders (Terms 801 to 835)	13
3.9	Miscellaneous (Terms 901 to 914)	19
INDEX OF TERMS		21

© Copyright — STANDARDS AUSTRALIA

Users of Standards are reminded that copyright subsists in all Standards Australia publications and software. Except where the Copyright Act allows and except where provided for below no publications or software produced by Standards Australia may be reproduced, stored in a retrieval system in any form or transmitted by any means without prior permission in writing from Standards Australia. Permission may be conditional on an appropriate royalty payment. Requests for permission and information on commercial software royalties should be directed to the head office of Standards Australia.

Standards Australia will permit up to 10 percent of the technical content pages of a Standard to be copied for use exclusively in-house by purchasers of the Standard without payment of a royalty or advice to Standards Australia.

Standards Australia will also permit the inclusion of its copyright material in computer software programs for no royalty payment provided such programs are used exclusively in-house by the creators of the programs.

Care should be taken to ensure that material used is from the current edition of the Standard and that it is updated whenever the Standard is amended or revised. The number and date of the Standard should therefore be clearly identified.

The use of material in print form or in computer software programs to be used commercially, with or without payment, or in commercial contracts is subject to the payment of a royalty. This policy may be varied by Standards Australia at any time.

This is a free page sample. Access the full version online.

STANDARDS ASSOCIATION OF AUSTRALIA

Australian Standard

ROTATING ELECTRICAL MACHINES—GENERAL REQUIREMENTS

PART 46: BRUSHES, BRUSH-HOLDERS, COMMUTATORS, AND SLIP-RINGS—GLOSSARY OF TERMS

1 SCOPE. This Standard provides definitions and terminology applicable to carbon brushes and brush-holders for cylindrical commutators and slip-rings.

2 DEFINITIONS. For the purpose of this Standard, the following definitions apply.

2.1 Hard carbon—one of various forms of amorphous carbon.

2.2 Carbon-graphite—a mixture of amorphous carbon and graphite.

2.3 Natural graphite—principally natural graphite.

2.4 Electrographite—one of various forms of amorphous carbon converted during manufacture to artificial graphite.

2.5 Metal-graphite—a mixture of metals and graphite.

2.6 Metal-impregnated graphite—carbon or graphite which has been impregnated with molten metal under pressure.

2.7 Resin-bonded (material)—carbon or graphite bonded with synthetic resin.

2.8 Brush-holder—a component of a rotating electrical machine intended to maintain a brush or several brushes in a definite position relative to the current collator and to apply a given force to the brush or brushes.

A brush-holder normally comprises:

1. A box to receive the brush or brushes (see Clause 3.8.1).
2. A method of fixing (see Clause 3.8.2).
3. A pressure system (see Clause 3.8.3).

See schematic diagram:

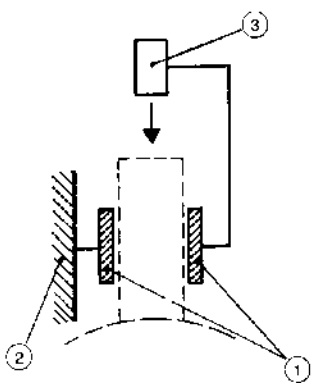

Brush-holders are grouped according to the orientation of the boxes as follows (see also Table 1, page 16):

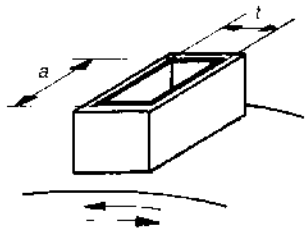

Axial orientation:
Symbol A: $t<a$

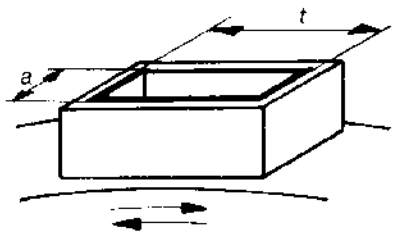

Tangential orientation:
Symbol T: $t>a$

Where a = brush dimension in the axial direction (see Term 103)

t = brush dimension in the tangential direction (see Term 102)

NOTE 1: Square section brushes are not recommended by IEC.

Similarly, brush holders intended for face-fixing are grouped according to the orientation of the fixing face as follows (see also Table 2, page 17):

(a) Fixing face parallel to the axial direction . . . . . second symbol A.

(b) Fixing face parallel to the tangential direction . . . . . second symbol T.

NOTE 2: Brush-holders for face-fixing are therefore grouped as AA, AT, TA, or TT.

COPYRIGHT

SAI GLOBAL

This is a free preview. Purchase the entire publication at the link below:

Product Page

Looking for additional Standards? Visit Intertek Inform Infostore

Learn about LexConnect, All Jurisdictions, Standards referenced in Australian legislation