This is a free page sample. Access the full version online.

Australian/New Zealand Standard®

Methods of testing bitumen and related roadmaking products

Method 13: Long-term exposure to heat and air

1 SCOPE This Standard sets out a method based on the accelerated aging of bitumen to determine the time required for bitumen to reach a viscosity level associated with distress in pavement surfacings.

NOTES:

1 The results of the test may be used to predict likely resistance to hardening of a bitumen in sprayed surfacings and in thin asphalt surfacings which are permeable to air.

2 The method takes too long to be used for 'day-to-day' quality control and is intended for occasional checking of quality, particularly where there has been a change in refinery crude feedstock or processing.

2 REFERENCED DOCUMENTS The following documents are referred to in this Standard:

AS

1681 Electrically-heated ovens in which flammable volatiles occur—Type 1 ovens

2008 Residual bitumen for pavements

2341 Methods of testing bitumen and related roadmaking products

AS/NZS

2341.5 Determination of apparent viscosity by 'Shell' sliding plate micro-viscometer

2341.10 Determination of the effect of heat and air on a moving film of bitumen (rolling thin film oven (RTFO) test)

BS

593 Specification for laboratory thermometers

IP Methods for analysis and testing, Part 1, Vol. 2, Appendix A

3 APPLICATION This method of test is applicable to bitumens specified in AS 2008 which have been subjected to the rolling thin film oven (RTFO) test treatment described in AS/NZS 2341.10.

NOTES:

1 When the relatively non-volatile residual bitumens used for paving are tested by this method, hardening produced by the treatment is mainly due to chemical attack by oxygen.

2 If the test is used to evaluate other types of bituminous paving binders, a check should be carried out to determine whether the observed hardening is caused, in part, by evaporation of volatile constituents.

COPYRIGHT

This is a free page sample. Access the full version online.

4 PRINCIPLE A known amount of bitumen from the RTFO treatment, dissolved in toluene, is placed in sample bottles in an oven. The oven is heated and the solvent evaporated with an atmosphere of carbon dioxide in the bottles, to deposit an approximately 20 μm thick, even film of the bitumen on the walls of the bottles.

Carbon dioxide is replaced by air and the bitumen films in the bottles are exposed in the (darkened) oven at a temperature of 100°C for selected periods.

After exposure, the bitumen is scraped from the walls of the bottles and mixed. Its apparent viscosity is then measured in accordance with AS 2341.5.

The time of exposure required to reach the specified apparent viscosity level (SAVL) is determined by interpolation between apparent viscosity results obtained for different times of exposure. (The SAVL is taken as 5.67 log Pa.s at 45°C at a shear rate of $5 \times 10^{-3}s^{-1}$.)

5 MATERIALS The following materials are required:

(a) Suitable cleaning solvent.

NOTE: 1,1,1—Trichloroethylene has been found to be suitable.

(b) Glass cleaning detergent.

(c) Toluene, AR grade.

(d) Carbon dioxide, cylinder, commercial grade.

(e) Silica gel desiccant, blue, granular.

6 APPARATUS

6.1 Air supply—capable of providing fresh, dried, dust-free air for long periods. A suitable, convenient arrangement is shown in Figure 1.

6.2 Flowmeter—capable of measuring the gas flow to the outlet orifice at a rate of 4 L/min (at 25°C and standard atmospheric pressure).

NOTE: A dry gas meter capable of measuring the volume of gas to within ±2 percent at a flow rate of 4 L/min is suitable. Calibration of dry gas meters can be carried out by comparison with a laboratory wet gas meter which itself has been subjected to primary calibration within the preceding two years.

6.3 Heating and mixing assembly—complete with polytetrafluoroethylene (PTFE) dish and suitable thermometer similar to that shown in Figure 2.

6.4 Oven

6.4.1 *General requirements* The oven used in this test is the same as the oven required for the RTFO test as described in AS/NZS 2341.10 but with some additional requirements.

The oven shall be electrically-heated and have forced draft air circulation. (See Figure 3 for such details as dimensions and direction of air flow.)

The door shall be fitted with a symmetrically located inspection window, 300 mm wide and 200 mm high, consisting of sheets of heat-resistant glass separated by a sealed air space. (A removable cover for this window should be provided.)

Ventilation of the oven shall be provided, at the top, by two symmetrically placed circular openings 25 mm in diameter and, if necessary, at the bottom, by one or two symmetrically placed openings of the same total area.

The oven shall be provided with a circular carriage, with openings and clips for firmly holding eight glass sample bottles in a horizontal position parallel to the shaft (see Figures 4(a), 4(b) and 5). This carriage shall be rotated in a vertical plane at a speed of 15 ±0.5 r/min by a shaft which is preferably supported by external ball bearings.

COPYRIGHT

This is a free page sample. Access the full version online.

The oven shall be fitted with a proportional temperature controller capable of maintaining the required set temperature within ±0.1°C as indicated by the monitoring thermometer (see Figure 4(b)).

NOTE: The preferred position of the sensing elements of the temperature controller is above and near the circular carriage.

The oven shall be equipped with a gas jet positioned to blow heated air or carbon dioxide centrally into the mouth of each bottle as it passes the lowest point of rotation of the carriage. The gas jet, with an outlet orifice of 1.0 ±0.2 mm diameter, shall be connected to a 7.5 ±0.5 m length of 8 mm nominal OD thin-walled copper tubing. This tubing shall be coiled to lie flat near the bottom of the oven and be provided with a suitable coupling through the oven wall for connection to the air or carbon dioxide supply.

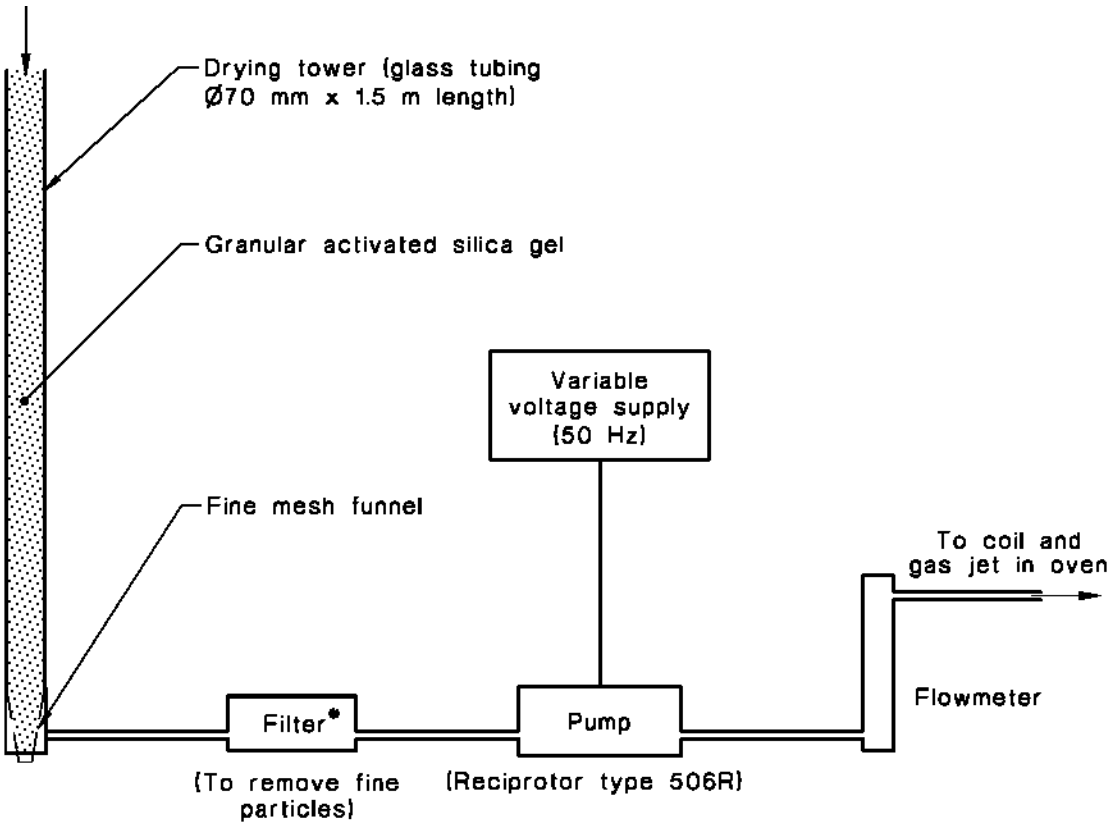

* Automotive fuel filters (paper) have been found suitable.

FIGURE 1 SUGGESTED ARRANGEMENT FOR LONG-TERM AIR SUPPLY

COPYRIGHT

This is a free page sample. Access the full version online.

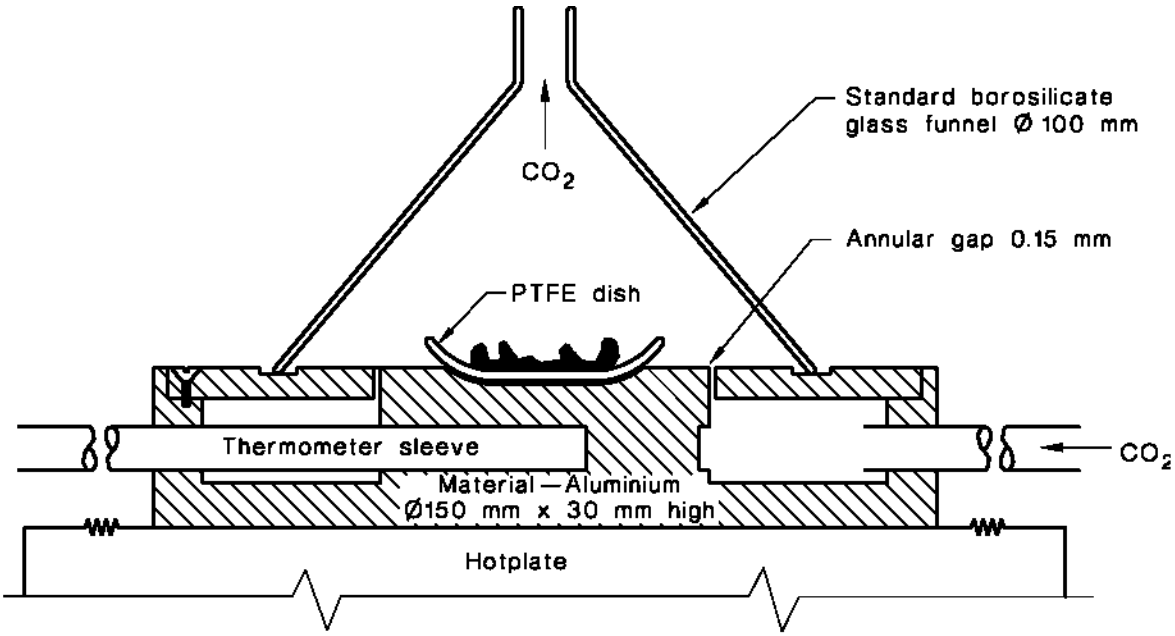

FIGURE 2 HEATING AND MIXING ASSEMBLY FOR TREATED SAMPLE—TYPICAL CONSTRUCTION

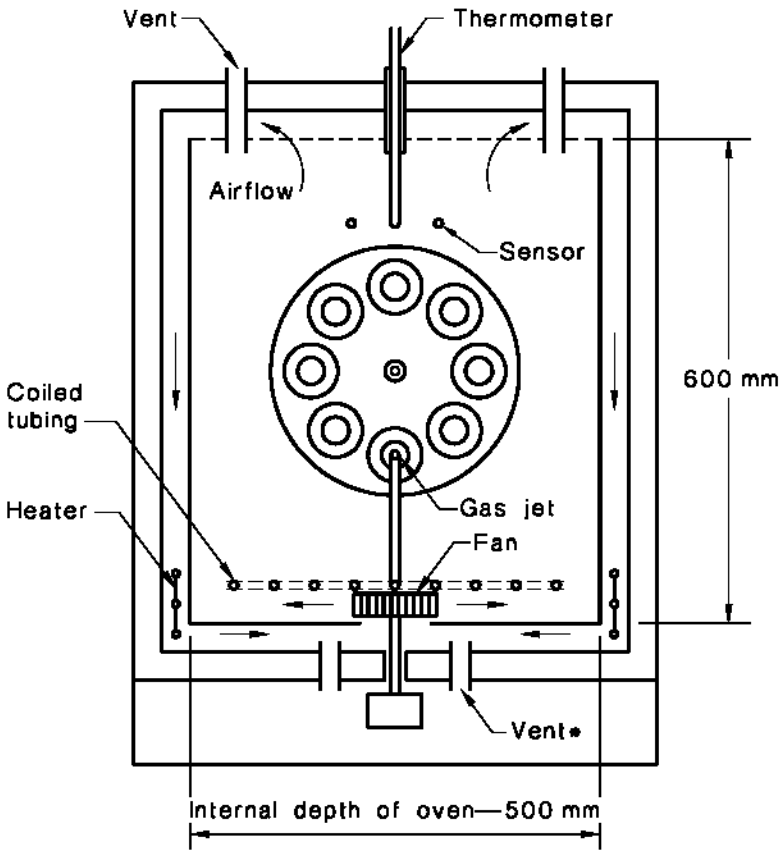

* Vents are necessary only if venting at fan motor shaft is inadequate

FIGURE 3 CROSS-SECTION OF TEST OVEN—TYPICAL CONSTRUCTION AND DIMENSIONS

COPYRIGHT

This is a free page sample. Access the full version online.

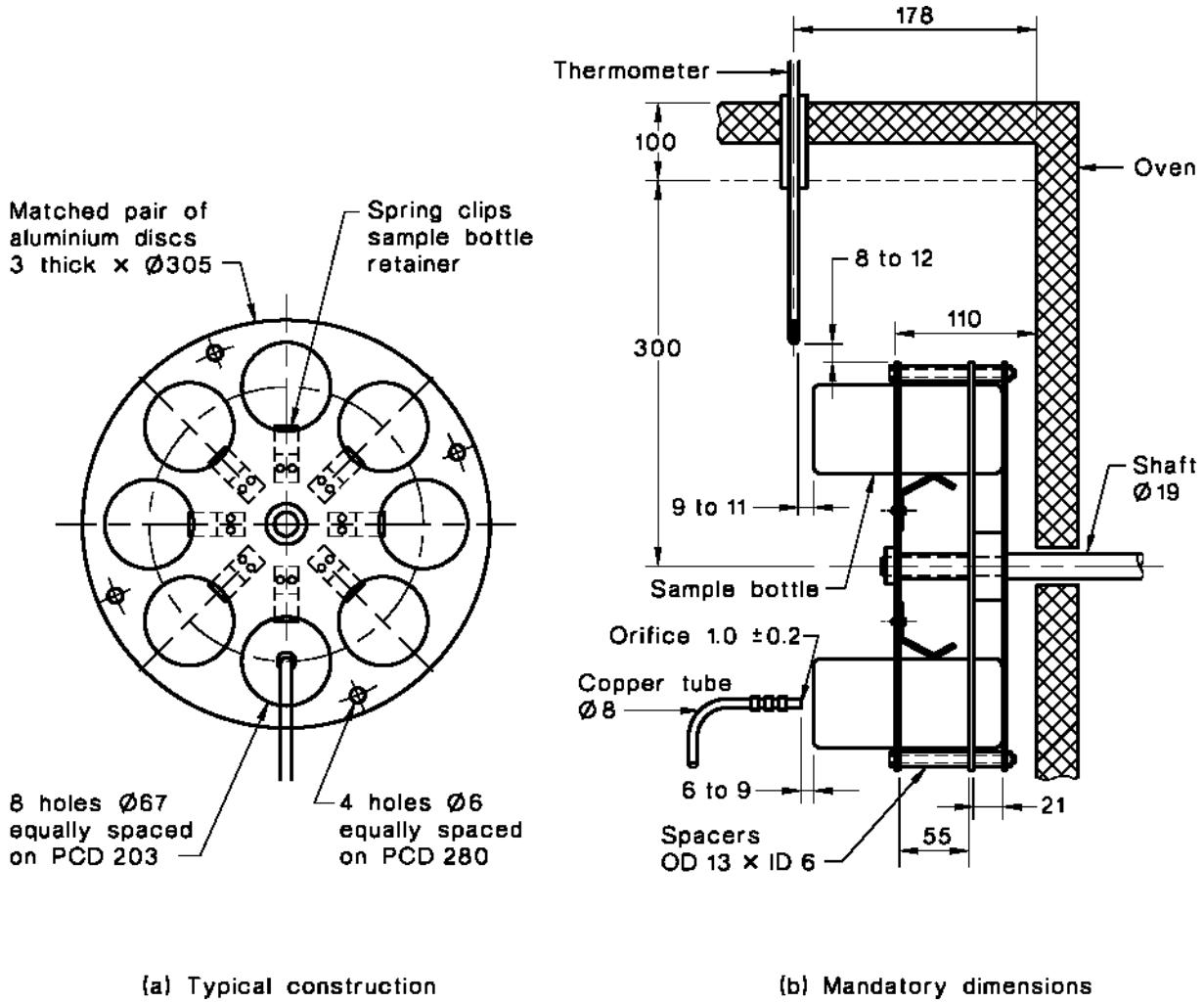

DIMENSIONS IN MILLIMETRES
(where no tolerances are given, dimensions are nominal)

FIGURE 4 ROTATING CARRIAGE

6.4.2 *Additional requirements* If the oven is to be used for the evaporation of toluene, the hazard of explosion needs to be minimized and the oven shall include the following features:

(a) An explosion relief vent with a minimum area of 0.033 m^2 for freely relieving internal pressures. For every 4.5 m^3 of oven volume, a minimum area of 1 m^2 of relief vent should be provided (see AS 1681).

(b) A door, which shall be provided with secure fastenings to prevent it from suddenly opening in a dangerous manner (see AS 1681).

(c) Top outlet vents, which should be sited under a suitable exhaust system to remove the flammable vapours (see AS 1681).

A separate enclosure with a rotating bottle rack, carbon dioxide supply, facilities for heating up to 100°C and means for the safe removal of the toluene vapours issuing from a vent is recommended.

COPYRIGHT

SAI GLOBAL

This is a free preview. Purchase the entire publication at the link below:

Product Page

Looking for additional Standards? Visit Intertek Inform Infostore

Learn about LexConnect, All Jurisdictions, Standards referenced in Australian legislation