This is a free page sample. Access the full version online.

National Standards Authority of Ireland

IRISH STANDARD

I.S. EN 1093-8:1999

ICS 13.040.40

National Standards
Authority of Ireland
Dublin 9
Ireland

Tel: (01) 807 3800
Tel: (01) 807 3838

SAFETY OF MACHINERY - EVALUATION OF THE EMISSION OF AIRBORNE HAZARDOUS SUBSTANCES - PART 8: POLLUTANT CONCENTRATION PARAMETER, TEST BENCH METHOD

This Irish Standard was published under the authority of the National Standards Authority of Ireland and comes into effect on:

March 5, 1999

NO COPYING WITHOUT NSAI PERMISSION EXCEPT AS PERMITTED BY COPYRIGHT LAW

© NSAI 1999

Price Code E

Údarás um Chaighdeáin Náisiúnta na hÉireann

This is a free page sample. Access the full version online.

This is a free page sample. Access the full version online.

EUROPEAN STANDARD

NORME EUROPÉENNE

EUROPÄISCHE NORM

EN 1093-8

September 1998

ICS 13.040.40

Descriptors: safety of machines, air pollution, emission, hazardous substances, measurements, concentration, test bench

English version

Safety of machinery - Evaluation of the emission of airborne hazardous substances - Part 8: Pollutant concentration parameter, test bench method

Sécurité des machines - Evaluation de l'émission de substances dangereuses véhiculées par l'air - Partie 8: Paramètre de concentration en pollutant, méthode sur banc d'essai

Sicherheit von Maschinen - Bewertung der Emission von luftgetragenen Gefahrstoffen - Teil 8: Konzentrationsparameter des luftverunreinigenden Stoffes, Prüfstandverfahren

This European Standard was approved by CEN on 4 September 1998.

CEN members are bound to comply with the CEN/CENELEC Internal Regulations which stipulate the conditions for giving this European Standard the status of a national standard without any alteration. Up-to-date lists and bibliographical references concerning such national standards may be obtained on application to the Central Secretariat or to any CEN member.

This European Standard exists in three official versions (English, French, German). A version in any other language made by translation under the responsibility of a CEN member into its own language and notified to the Central Secretariat has the same status as the official versions.

CEN members are the national standards bodies of Austria, Belgium, Czech Republic, Denmark, Finland, France, Germany, Greece, Iceland, Ireland, Italy, Luxembourg, Netherlands, Norway, Portugal, Spain, Sweden, Switzerland and United Kingdom.

EUROPEAN COMMITTEE FOR STANDARDIZATION
COMITÉ EUROPÉEN DE NORMALISATION
EUROPÄISCHES KOMITEE FÜR NORMUNG

Central Secretariat: rue de Stassart, 36 B-1050 Brussels

© 1998 CEN All rights of exploitation in any form and by any means reserved worldwide for CEN national Members.

Ref. No. EN 1093-8:1998 E

This is a free page sample. Access the full version online.

Contents

Page

Foreword 2

0 Introduction 3

1 Scope 3

2 Normative references 3

3 Definitions 3

4 Principle 3

5 Test bench 4

6 Procedure 5

7 Expression of results 5

8 Test report 5

Annex A (informative)

Bibliography 7

Annex ZA (informative)

Clauses of this European Standard addressing essential requirements or other provisions of EU directives . . . 8

Foreword

This European Standard has been prepared by Technical Committee CEN/TC 114 "Safety of machinery", the secretariat of which is held by DIN.

This European Standard shall be given the status of a national standard, either by publication of an identical text or by endorsement, at the latest by March 1999, and conflicting national standards shall be withdrawn at the latest by March 1999.

This European Standard has been prepared under a mandate given to CEN by the European Commission and the European Free Trade Association, and supports essential requirements of EU Directive(s).

For relationship with EU Directive(s), see informative Annex ZA, which is an integral part of this standard.

According to the CEN/CENELEC Internal Regulations, the national standards organizations of the following countries are bound to implement this European Standard: Austria, Belgium, Czech Republic, Denmark, Finland, France, Germany, Greece, Iceland, Ireland, Italy, Luxembourg, Netherlands, Norway, Portugal, Spain, Sweden, Switzerland and the United Kingdom.

This is a free page sample. Access the full version online.

0 Introduction

This European Standard is a type B standard as stated in ENV 1070 :1993.

This European Standard is a part of EN 1093. Part 1 of this standard presents a selection of different methods for the evaluation of the emission of airborne hazardous substances from machines.

1 Scope

This European Standard specifies a test bench method for the measurement of the pollutant concentration parameter of a specified airborne hazardous substance from machines using a test bench under specified operating conditions .

This method is only applicable for the determination of emitted gases, vapours and respirable particles.

The determination of the emission rate in a test bench (see EN 1093-3) shall be used when possible.

Measurement of the pollutant concentration parameter of a machine can serve for the:

a) evaluation of the performance of a machine;

b) evaluation of the improvement of the machine;

c) comparison of machines within groups of machines with the same intended use (groups are defined by the function and materials processed),

d) ranking of machines from the same group according to their pollutant concentration parameters;

e) determination of the state of the art of machines with respect to their pollutant concentration parameter.

2 Normative references

This European Standard incorporates by dated or undated reference, provisions from other publications. These normative references are cited at the appropriate places in the text and the publications are listed hereafter. For dated references, subsequent amendments to or revisions of any of these publications apply to this European Standard only when incorporated in it by amendment or revision. For undated references the latest edition of the publication referred to applies.

EN 292-1 : 1991	Safety of machinery - Basic concepts, general principles for design - Part 1: Basic terminology, methodology
EN 292-2 : 1991	Safety of machinery - Basic concepts, general principles for design - Part 2: Technical principles and specifications
EN 292-2/A1 : 1995	Safety of machinery - Basic concepts, general principles for design - Part 2: Technical principles and specifications; Amendment A1
ENV 1070: 1993	Safety of machinery - Terminology
EN 1093-1	Safety of machinery - Evaluation of the emission of airborne hazardous substances - Part 1: Selection of test methods
ISO 2602:1980	Statistical interpretation of test results - Estimation of the mean - Confidence interval

3 Definitions

For the purposes of this European Standard the definitions of ENV 1070 : 1993 and the following definition applies:

pollutant concentration parameter, cabin, P_{cc}: The measured concentration of a specified pollutant in defined position(s) near the machine. For the purpose of this European Standard one measurement point shall be used, preferably in the duct.

4 Principle

The principle of the measurement method is to operate machines under controlled conditions in a test bench and to measure the pollutant concentration at a well defined location (see 5.2) for a specified exhaust air flow rate of the test bench. This concentration gives an indication of the emission from the machine.

This is a free page sample. Access the full version online.

5 Test bench

5.1 Description of the test bench

The test bench consists of a cabin with a funnel and a subsequent air mover (see figure 1).

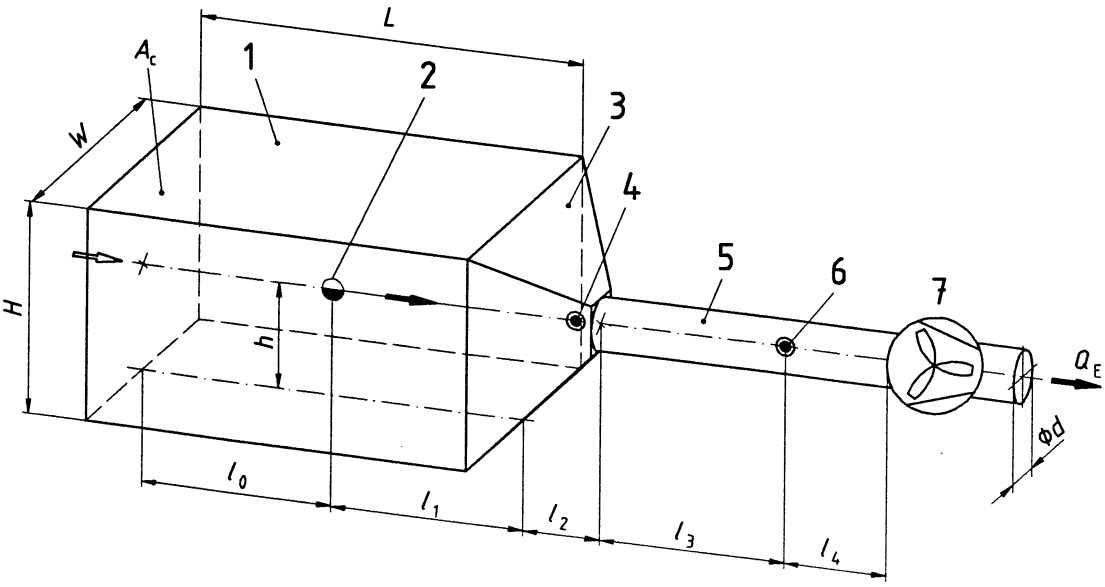

A_c	cross section of the cabin;	1	test cabin;
H	height of the cabin;	2	source [1]);
h	height of the emission source from the cabin floor;	3	funnel;
W	width of the cabin	4	measurement point 2;
		5	tunnel;
		6	preferred measurement point 1;
		7	air mover.

W/H	≥ 0,66 ≤ 1,5	l_1	≥ $0,5\sqrt{A_c}$ ≤ $2,0\sqrt{A_c}$ ≤ 2,0 m	l_3	≥ 5d
h	≤ 0,66H			l_4	≥ 3d
l_0	≥ $0,5\sqrt{A_c}$	l_2	≥ $0,5\sqrt{A_c}$ ≤ $\sqrt{A_c}$	Q_E	cabin exhaust flow rate

Figure 1: Test bench (schematic layout)

The air mover produces an air flow in the test cabin from the inlet towards the funnel. The cabin shall be equipped with a permeable inlet (e. g. macroporous filter material, perforated plastic foil or plate) in order to obtain a uniform air flow across the inlet and to avoid the escape of the pollutant from the cabin.

The cabin exhaust flow rate shall be specified in type C standards. It has to be controlled in order to remain constant. The cross section of the cabin (form and dimensions) shall be chosen according to the size of the machine. The maximum cross section area of the machine shall not exceed a fifth of the cross section area of the cabin.

The cabin shall be long enough to accommodate the machine and the operator with the emission sources as close to the specified location as practicable in figure 1.

The machines shall be positioned in the cabin in such a way that the source of the pollutant emitted from the machine is in the area of the longitudinal axis of the cabin at a distance of l_1 from the beginning of the funnel and of l_0 from the inlet.

---

[1]) Generally the source cannot be considered as a point, but as a zone including several sources.

SAI GLOBAL

This is a free preview. Purchase the entire publication at the link below:

Product Page

Looking for additional Standards? Visit Intertek Inform Infostore

Learn about LexConnect, All Jurisdictions, Standards referenced in Australian legislation