This is a free page sample. Access the full version online.

National Standards Authority of Ireland

IRISH STANDARD

I.S. EN 4022:2002

ICS 49.080

Aerospace series - Pipe coupling 8^0 30' in titanium alloy - Elbows 90^0 bulkhead, welded end

National Standards
Authority of Ireland
Dublin 9
Ireland

Tel (01) 807 3800
Tel· (01) 807 3838

This Irish Standard was published under the authority of the National Standards Authority of Ireland and comes into effect on. December 21. 2001

NO COPYING WITHOUT NSAI PERMISSION EXCEPT AS PERMITTED BY COPYRIGHT LAW

© NSAI 2002

Price Code E

Údarás um Chaighdeáin Náisiúnta na hÉireann

This is a free page sample. Access the full version online.

This is a free page sample. Access the full version online.

EUROPEAN STANDARD
NORME EUROPÉENNE
EUROPÄISCHE NORM

EN 4022

October 2001

ICS 49.080

English version

Aerospace series - Pipe coupling 8°30' in titanium alloy - Elbows 90° bulkhead, welded end

Série aérospatiale - Système de raccordement 8°30' en alliage de titane - Raccords coudés à 90° pour traversée de cloison, à souder

Luft- und Raumfahrt - Rohrverschraubung 8°30' aus Titanlegierung - Winkelverschraubungen 90° mit Anschweißende

This European Standard was approved by CEN on 29 December 2000.

CEN members are bound to comply with the CEN/CENELEC Internal Regulations which stipulate the conditions for giving this European Standard the status of a national standard without any alteration. Up-to-date lists and bibliographical references concerning such national standards may be obtained on application to the Management Centre or to any CEN member.

This European Standard exists in three official versions (English, French, German). A version in any other language made by translation under the responsibility of a CEN member into its own language and notified to the Management Centre has the same status as the official versions.

CEN members are the national standards bodies of Austria, Belgium, Czech Republic, Denmark, Finland, France, Germany, Greece, Iceland, Ireland, Italy, Luxembourg, Netherlands, Norway, Portugal, Spain, Sweden, Switzerland and United Kingdom.

EUROPEAN COMMITTEE FOR STANDARDIZATION
COMITÉ EUROPÉEN DE NORMALISATION
EUROPÄISCHES KOMITEE FÜR NORMUNG

Management Centre: rue de Stassart, 36 B-1050 Brussels

© 2001 CEN *All rights of exploitation in any form and by any means reserved worldwide for CEN national Members.*

Ref. No. EN 4022:2001 E

This is a free page sample. Access the full version online.

Foreword

This European Standard has been prepared by the European Association of Aerospace Manufacturers (AECMA).

After inquiries and votes carried out in accordance with the rules of this Association, this Standard has received the approval of the National Associations and the Official Services of the member countries of AECMA, prior to its presentation to CEN.

This European Standard shall be given the status of a national standard, either by publication of an identical text or by endorsement, at the latest by April 2002, and conflicting national standards shall be withdrawn at the latest by April 2002.

According to the CEN/CENELEC Internal Regulations, the national standards organizations of the following countries are bound to implement this European Standard: Austria, Belgium, Czech Republic, Denmark, Finland, France, Germany, Greece, Iceland, Ireland, Italy, Luxembourg, Netherlands, Norway, Portugal, Spain, Sweden, Switzerland and the United Kingdom.

This is a free page sample. Access the full version online.

1 Scope

This standard specifies the characteristics of elbows 90°, bulkhead, welded end, for pipe couplings 8°30', in titanium alloy, for aerospace applications.

Nominal pressure: up to 28 000 kPa

Temperature range: - 55 °C to 135 °C

2 Normative references

This European Standard incorporates by dated or undated reference provisions from other publications. These normative references are cited at the appropriate places in the text and the publications are listed hereafter. For dated references, subsequent amendments to or revisions of any of these publications apply to this European Standard only when incorporated in it by amendment or revision. For undated references, the latest edition of the publication referred to applies (including amendments).

ISO 5855-3, *Aerospace – MJ threads – Part 3: Limit dimensions for fittings for fluid systems.*

EN 2424, *Aerospace series – Marking of aerospace products.*

EN 2491, *Aerospace series – Molybdenum disulphide dry lubricants – Coating methods.*

EN 2656, *Aerospace series – Pipe coupling – Coupling ends, welded – Geometric configuration.*

EN 3267, *Aerospace series – Washers, bulkhead, in titanium alloy.*

EN 3274, *Aerospace series – Pipe coupling 8°30' – Thread ends – Geometric configuration.*

EN 3275, *Aerospace series – Pipe coupling 8°30' up to 28 000 kPa – Dynamic beam seal – Metric series – Technical specification.*

EN 3311, *Aerospace series – Titanium alloy TI-P64001 – Annealed – Bar for machining – $D \leq 150$ mm.*[1])

EN 3312, *Aerospace series – Titanium alloy TI-P64001 – Grade 2 – Annealed – Forgings – $D_e \leq 150$ mm.*[1])

EN 3314, *Aerospace series – Titanium alloy TI-P64001 – Solution treated and aged – Bar for machining – $D \leq 75$ mm.*[1])

EN 3315, *Aerospace series – Titanium alloy TI-P64001 – Solution treated and aged – Forgings – $D_e \leq 75$ mm.*[1])

[1]) Published as AECMA Prestandard at the date of publication of this standard

This is a free page sample. Access the full version online.

3 Required characteristics

3.1 Configuration – Dimensions – Mass

According to figure 1 and table 1. The values apply before lubricating.

Dimensions not specified are at the manufacturer's option provided that the qualification and acceptance requirements of EN 3275, type II are met.

3.2 Surface roughness

According to figure 1, unless otherwise specified in the design documentation.

3.3 Materials

According to EN 3311 or EN 3314, EN 3312 or EN 3315.

3.4 Surface treatment

Welded end without surface treatment min. 10 mm (outside and bore diameters).

Lubrication: according to EN 2491, on threads and sealing face.

Prior to application of the lubricant, the surface shall be abrasive blasted using non-metallic grit.

Film thickness 0,005 mm to 0,013 mm.

3.5 Internal surface finishing

Finishing shall give a radius R of 0,3 mm to 1,0 mm and a surface roughness of 0,8 µm. Hand deburring is not permitted.

Dimensions in millimetres

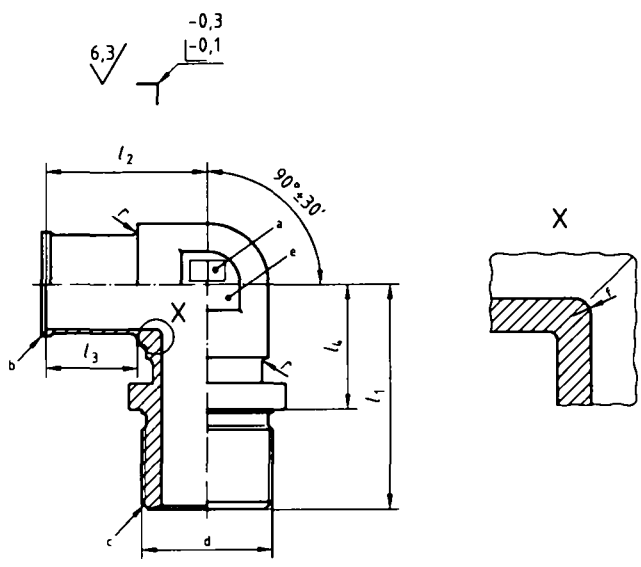

a Area for marking
b According to EN 2656
c According to EN 3274, form D
d Thread
e Across flats s
f R 0,3 to 1,0

Figure 1

SAI GLOBAL

This is a free preview. Purchase the entire publication at the link below:

Product Page

Looking for additional Standards? Visit Intertek Inform Infostore

Learn about LexConnect, All Jurisdictions, Standards referenced in Australian legislation