This is a free page sample. Access the full version online.

National Standards Authority of Ireland

STANDARD

**I.S. EN 50377-7-1:2004**

ICS 33.180.20

# CONNECTORS SETS AND INTERCONNECT COMPONENTS TO BE USED IN OPTICAL FIBRE COMMUNICATION SYSTEMS - PRODUCT SPECIFICATIONS PART 7-1: TYPE LC-PC DUPLEX TERMINATED ON IEC 60793-2 CATEGORY A1A AND A1B MULTIMODE FIBRE

National Standards
Authority of Ireland
Dublin 9
Ireland

Tel: (01) 807 3800
Fax: (01) 807 3838

*This Irish Standard was published under the authority of the National Standards Authority of Ireland and comes into effect on:*

*July 12, 2004*

**NO COPYING WITHOUT NSAI PERMISSION EXCEPT AS PERMITTED BY COPYRIGHT LAW**

© NSAI 2004

**Price Code I**

Údarás um Chaighdeáin Náisiúnta na hÉireann

This is a free page sample. Access the full version online.

This is a free page sample. Access the full version online.

EUROPEAN STANDARD **EN 50377-7-1**

NORME EUROPÉENNE

EUROPÄISCHE NORM May 2004

ICS 33.180.20

English version

# Connector sets and interconnect components to be used in optical fibre communication systems – Product specifications Part 7-1: Type LC-PC duplex terminated on IEC 60793-2 category A1a and A1b multimode fibre

Jeux de connecteurs et composants d'interconnexion à utiliser dans les systèmes de communication par fibres optiques – Spécifications de produits Partie 7-1: Type multimodal duplex LC-PC câblé sur une fibre des catégories A1a et A1b selon la CEI 60793-2

Steckverbindersätze und Verbindungsbauelemente für Lichtwellenleiter-Datenübertragungssysteme – Produktnormen Teil 7-1: Bauart LC-PC-Duplex zum Anschluss an Mehrmodenfasern der Kategorie A1a und A1b nach IEC 60793-2

This European Standard was approved by CENELEC on 2003-12-02. CENELEC members are bound to comply with the CEN/CENELEC Internal Regulations which stipulate the conditions for giving this European Standard the status of a national standard without any alteration.

Up-to-date lists and bibliographical references concerning such national standards may be obtained on application to the Central Secretariat or to any CENELEC member.

This European Standard exists in three official versions (English, French, German). A version in any other language made by translation under the responsibility of a CENELEC member into its own language and notified to the Central Secretariat has the same status as the official versions.

CENELEC members are the national electrotechnical committees of Austria, Belgium, Cyprus, Czech Republic, Denmark, Estonia, Finland, France, Germany, Greece, Hungary, Iceland, Ireland, Italy, Latvia, Lithuania, Luxembourg, Malta, Netherlands, Norway, Poland, Portugal, Slovakia, Slovenia, Spain, Sweden, Switzerland and United Kingdom.

CENELEC

European Committee for Electrotechnical Standardization
Comité Européen de Normalisation Electrotechnique
Europäisches Komitee für Elektrotechnische Normung

**Central Secretariat: rue de Stassart 35, B - 1050 Brussels**

© 2004 CENELEC - All rights of exploitation in any form and by any means reserved worldwide for CENELEC members.

Ref. No. EN 50377-7-1:2004 E

This is a free page sample. Access the full version online.



## Foreword

This European Standard was prepared by the Technical Committee CENELEC TC 86BXA, Fibre optic interconnect, passive and connectorised components.

The text of the draft was submitted to the Unique Acceptance Procedure and was approved by CENELEC as EN 50377-7-1 on 2003-12-02.

The following dates were fixed:

- latest date by which the EN has to be implemented at national level by publication of an identical national standard or by endorsement (dop) 2004-12-01

- latest date by which the national standards conflicting with the EN have to be withdrawn (dow) 2006-12-01

This is a free page sample. Access the full version online.



**Connector sets and interconnect components to be used in optical fibre communication systems – Product specifications**

**Part 7-1: LC-PC duplex mutimode terminated on IEC 60793-2 category A1a and A1b fibre**

| Description | | Performance | |
|---|---|---|---|
| Coupling mechanism: | latch push-pull | Application: | For use in customer premises<br>IEC category C environment |
| Configuration: | plug/adaptor/plug | Attenuation grade:<br>(Random mate) | M: max. 0,75 dB<br>mean. ≤ 0,35 dB<br>≤ 0,50 dB for ≥ 95 % of measurements |
| Fibre category: | IEC 60793-2<br>type A1a, A1b | Return loss grade:<br>(Random mate) | M: ≥ 20 dB |
| Cable type | see Clause 4 | | |

**Normative references**

| | |
|---|---|
| EN 50173 | Information technology - Generic cabling systems |
| EN 61300 series | Fibre optic interconnection devices and passive components - Basic test and measurement procedures |
| EN 61754-20 | Fibre optic connector interfaces - Part 20: Type LC connector family |
| EN 186000-1 | Generic specification: Connector sets for optical fibres and cables - Part 1: Requirements, test methods and qualification approval procedures |
| IEC 60793-2 | Optical fibres - Part 2: Product specifications |
| IEC 60794-2 | Optical fibre cables - Part 2: Product specification (indoor cable) |
| IEC 61753-3-3 | Fibre optic connectors terminated on multimode fibre for category C - Controlled environments |
| ISO/IEC 11801 | Information technology - Generic cabling for customer premises |

Outline and maximum dimensions:

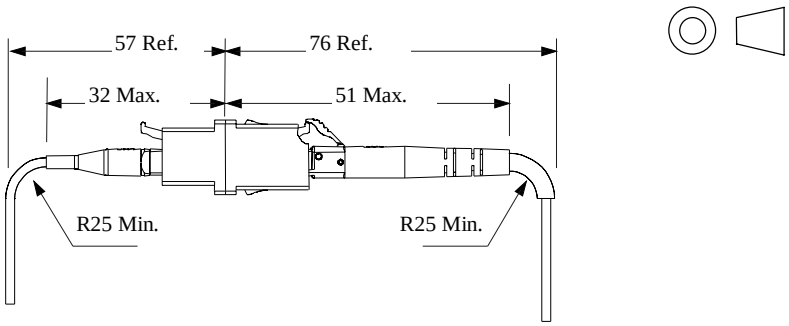

This is a free page sample. Access the full version online.



**Contents**

1 Scope ..... 5
1.1 Product definition ..... 5
1.2 Intermateability ..... 5
1.3 Operating environment ..... 5
1.4 Reliability ..... 5
1.5 Quality assurance ..... 5

2 Normative references ..... 5

3 Description ..... 6
3.1 Plug ..... 6
3.2 Adaptor ..... 6
3.3 Materials ..... 6
3.4 Dimensions ..... 7
3.5 Colour and marking ..... 7

4 Variants ..... 7
4.1 Terminated plug ..... 7
4.2 Adaptor ..... 8
4.3 Identification of variants ..... 8

5 Dimensional requirements ..... 8
5.1 Outline dimensions ..... 8
5.1.1 Plug variants ..... 8
5.1.2 Adaptor variants ..... 9
5.2 Mating face and other limit dimensions ..... 10
5.2.1 Plug ..... 10
5.2.2 Ferrule endface geometry after termination ..... 13
5.2.3 Adaptor ..... 15
5.2.4 Pin gauge for adaptor ..... 17

6 Tests ..... 18
6.1 Sample size ..... 18
6.2 Test and measurement methods ..... 18
6.3 Test sequence ..... 18
6.4 Pass/Fail criteria ..... 18

7 Test report ..... 18

8 Testing requirements ..... 18
8.1 Dimensional and marking requirements ..... 18
8.2 Optical Performance requirements ..... 19
8.3 Mechanical Performance requirements ..... 20
8.4 Environmental Performance requirements ..... 23

Annex A (informative) Attenuation reference plug details ..... 25
Annex B (informative) Sample size and product sourcing requirements ..... 25
Bibliography ..... 25

SAI GLOBAL

This is a free preview.  Purchase the entire publication at the link below:

Product Page

Looking for additional Standards? Visit Intertek Inform Infostore

Learn about LexConnect, All Jurisdictions, Standards referenced in Australian legislation