This is a free page sample. Access the full version online.

National Standards Authority of Ireland

IRISH STANDARD

I.S. EN 50377-8-6:2007

ICS 33.180.20

CONNECTOR SETS AND INTERCONNECT COMPONENTS TO BE USED IN OPTICAL FIBRE COMMUNICATION SYSTEMS - PRODUCT SPECIFICATIONS -- PART 8-6: LSH-HR SIMPLEX TERMINATED ON IEC 60793-2-50 CATEGORY B1.1 AND B1.3 SINGLEMODE FIBRE, WITH FULL ZIRCONIA FERRULE CATEGORY C

National Standards
Authority of Ireland
Glasnevin, Dublin 9
Ireland

Tel: +353 1 807 3800
Fax: +353 1 807 3838
http://www.nsai.ie

Sales
http://www.standards.ie

This Irish Standard was published under the authority of the National Standards Authority of Ireland and comes into effect on:
2 October 2007

NO COPYING WITHOUT NSAI PERMISSION EXCEPT AS PERMITTED BY COPYRIGHT LAW

© NSAI 2007

Price Code K

Údarás um Chaighdeáin Náisiúnta na hÉireann

This is a free page sample. Access the full version online.

This page is intentionally left BLANK.

This is a free page sample. Access the full version online.

EUROPEAN STANDARD

NORME EUROPÉENNE

EUROPÄISCHE NORM

EN 50377-8-6

August 2007

ICS 33.180.20

English version

Connector sets and interconnect components to be used in optical fibre communication systems - Product specifications - Part 8-6: LSH-HR simplex terminated on IEC 60793-2-50 category B1.1 and B1.3 singlemode fibre, with full zirconia ferrule category C

Jeux de connecteurs et composants d'interconnexion à utiliser dans les systèmes de communication par fibres optiques - Spécifications de produit - Partie 8-6: Type LSH-HR simplex câblé sur une fibre unimodale des catégories B1.1 et B1.3 de la CEI 60793-2-50, férule tout zircone, catégorie C

Steckverbindersätze und Verbindungsbauelemente für Lichtwellenleiter-Datenübertragungssysteme - Produktnormen - Teil 8-6: Bauart LSH-HR-Simplex zum Anschluss an Einmodenfasern der Typen B1.1 und B1.3 nach IEC 60793-2-50 mit Zirkonium-Stift für die Kategorie C

This European Standard was approved by CENELEC on 2007-03-01. CENELEC members are bound to comply with the CEN/CENELEC Internal Regulations which stipulate the conditions for giving this European Standard the status of a national standard without any alteration.

Up-to-date lists and bibliographical references concerning such national standards may be obtained on application to the Central Secretariat or to any CENELEC member.

This European Standard exists in three official versions (English, French, German). A version in any other language made by translation under the responsibility of a CENELEC member into its own language and notified to the Central Secretariat has the same status as the official versions.

CENELEC members are the national electrotechnical committees of Austria, Belgium, Bulgaria, Cyprus, the Czech Republic, Denmark, Estonia, Finland, France, Germany, Greece, Hungary, Iceland, Ireland, Italy, Latvia, Lithuania, Luxembourg, Malta, the Netherlands, Norway, Poland, Portugal, Romania, Slovakia, Slovenia, Spain, Sweden, Switzerland and the United Kingdom.

CENELEC

European Committee for Electrotechnical Standardization
Comité Européen de Normalisation Electrotechnique
Europäisches Komitee für Elektrotechnische Normung

Central Secretariat: rue de Stassart 35, B - 1050 Brussels

© 2007 CENELEC - All rights of exploitation in any form and by any means reserved worldwide for CENELEC members.

Ref. No. EN 50377-8-6:2007 E

This is a free page sample. Access the full version online.

Foreword

This European Standard was prepared by the Technical Committee CENELEC TC 86BXA, Fibre optic interconnect, passive and connectorised components.

The text of the draft was submitted to the Unique Acceptance Procedure and was approved by CENELEC as EN 50377-8-6 on 2007-03-01.

The following dates were fixed:

– latest date by which the EN has to be implemented at national level by publication of an identical national standard or by endorsement	(dop)	2008-03-01
– latest date by which the national standards conflicting with the EN have to be withdrawn	(dow)	2010-03-01

This is a free page sample. Access the full version online.

Connector sets and interconnect components to be used in optical fibre communication systems - Product specifications

Part 8-6: LSH-HR simplex terminated on IEC 60793-2-50 category B1.1 and B1.3 singlemode fibre, with full zirconia ferrule category C

Description		Performance	
Coupling mechanism:	Latched push-pull	Application:	For use in EN category C (controlled environment)
Configuration:	Plug/adaptor/plug	Attenuation grades: (random mate)	B: ≤ 0,12 dB mean ≤ 0,25 dB for > 97 % of measurements C: ≤ 0,25 dB mean ≤ 0,50 dB for > 97 % of measurements
Fibre category:	EN 60793-2-50 Types B1.1 and B1.3		
Cable type:	See Table 3	Return loss grades:	1: ≥ 60 dB mated ≥ 55 dB unmated

Related documents:

EN 60794-2	Optical fibre cables - Part 2: Indoor cables - Sectional specification (IEC 60794-2)
EN 61300 series	Fibre optic interconnecting devices and passive components - Basic test and measurement procedures (IEC 61300 series)
EN 61753-1	Fibre optic interconnecting devices and passive components performance standard - Part 1: General and guidance for performance standards (IEC 61753-1)
EN 61754-15	Fibre optic connector interfaces - Part 15: Type LSH connector family (IEC 61754-15)
EN 61755-1	Fibre optic connector optical interfaces - Part 1: Optical interfaces for single mode non-dispersion shifted fibres - General and guidance (IEC 61755-1)
EN 61755-3-2 [1)]	Fibre optic connector optical interfaces - Part 3-2: Optical interface, 2,5 mm and 1,25 mm diameter cylindrical full zirconia ferrules for 8 degrees angled-PC single mode fibres (IEC 61755-3-2, mod.)

Outline and maximum dimensions:

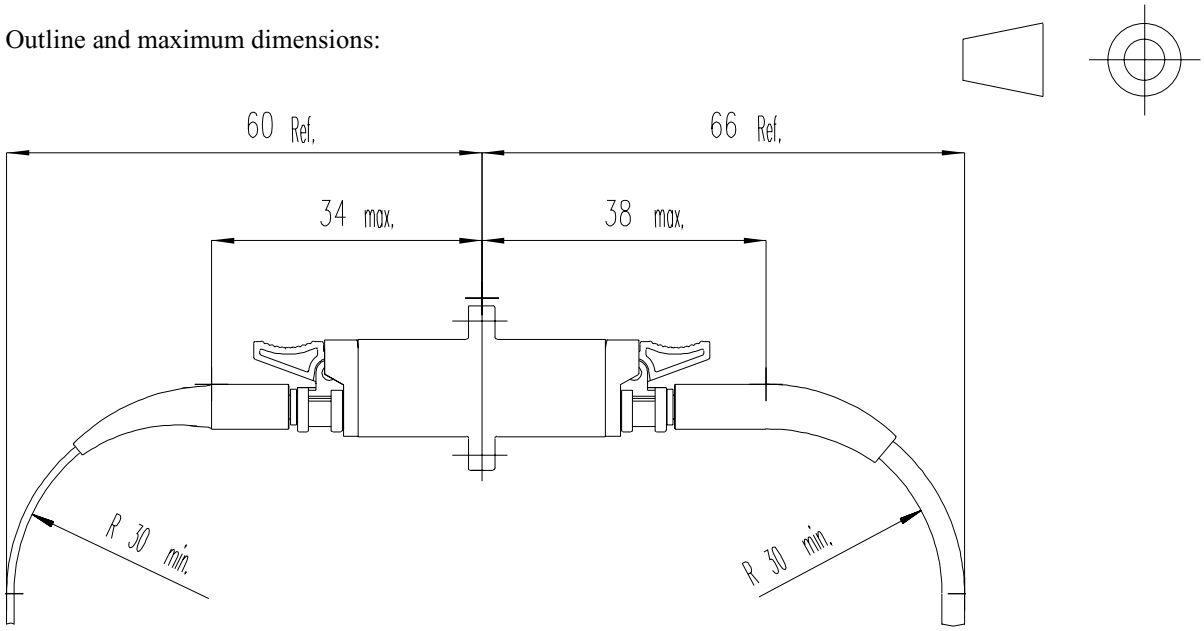

[1)] At draft stage.

This is a free page sample. Access the full version online.

Contents

1 Scope ... **5**
1.1 Product definition ... 5
1.2 Intermateability ... 5
1.3 Operating environment ... 5
1.4 Reliability ... 5
1.5 Quality assurance ... 5
2 Normative references ... **6**
3 Description ... **7**
3.1 Plug ... 7
3.2 Adaptor ... 7
3.3 Materials ... 7
3.4 Dimensions ... 7
3.5 Colour and marking ... 7
4 Variants ... **8**
4.1 Terminated plug ... 8
4.2 Adaptor ... 9
5 Dimensional requirements ... **10**
5.1 Outline dimensions ... 10
5.2 Mating face and other limit dimensions ... 14
6 Tests ... **23**
6.1 Sample size ... 23
6.2 Test and measurement methods ... 23
6.3 Test sequence ... 23
6.4 Pass/fail criteria ... 23
7 Test report ... **23**
8 Product qualification requirements ... **24**
8.1 Dimensional and marking requirements ... 24
8.2 Optical performance requirements ... 24
8.3 Mechanical performance requirements ... 26
8.4 Environmental performance requirements ... 30

Annex A (informative) **Attenuation against reference** ... **32**
Annex B (normative) **Adaptor matched reference plug details** ... **33**
Annex C (normative) **Sample size and product sourcing requirements** ... **34**
Annex D (informative) **Zirconia ferrule response surface** ... **35**

Bibliography ... **36**

Figure 1 - Outline dimensions - Plug ... 10
Figure 2 - Outline dimensions - Adaptor ... 11
Figure 3 - Mating face and other limit dimensions - Plug ... 14
Figure 4 - Ferrule end face geometry - After termination ... 16
Figure 5 - Positioning of fibre core ... 17
Figure 6 - Ferrule end face geometry - Allowable undercut ... 18
Figure 7 - Requirements for the attenuation grades for the plug fibre core connected to the ideal reference ... 19
Figure 8 - Mating face and other dimensions - Adaptor ... 20
Figure 9 - Pin gauge for adaptor ... 22
Figure D.1 - Radius vs. undercut and apex offset ... 35

Table 1 - Ensured level of random attenuation ... 5
Table 2 - Preferred colour scheme ... 7
Table 3 - Plug variants ... 8
Table 4 - Adaptor variants ... 9
Table 5 - Geometrical parameters ... 17
Table 6 - Optical performance requirements ... 24
Table 7 - Mechanical performance requirements ... 26
Table 8 - Environmental performance requirements ... 30

SAI GLOBAL

This is a free preview. Purchase the entire publication at the link below:

Product Page

Looking for additional Standards? Visit Intertek Inform Infostore

Learn about LexConnect, All Jurisdictions, Standards referenced in Australian legislation