This is a free page sample. Access the full version online.

National Standards Authority of Ireland

IRISH STANDARD

I.S. EN 3275:2002

ICS 49.080

National Standards
Authority of Ireland
Dublin 9
Ireland

Tel: (01) 807 3800
Tel: (01) 807 3838

AEROSPACE SERIES - PIPE COUPLING 8°30' UP TO 28 000 KPA - DYNAMIC BEAM SEAL - METRIC SERIES - TECHNICAL SPECIFICATION

This Irish Standard was published under the authority of the National Standards Authority of Ireland and comes into effect on: June 21, 2002

NO COPYING WITHOUT NSAI PERMISSION EXCEPT AS PERMITTED BY COPYRIGHT LAW

© NSAI 2002

Price Code J

Údarás um Chaighdeáin Náisiúnta na hÉireann

This is a free page sample. Access the full version online.

EUROPEAN STANDARD

NORME EUROPÉENNE

EUROPÄISCHE NORM

EN 3275

April 2002

ICS: 49.080

English version

Aerospace series - Pipe coupling 8°30' up to 28 000 kPa - Dynamic beam seal - Metric series - Technical specification

Série aérospatiale - Système de raccordement 8°30' jusqu'à 28 000 kPa - Joint à lèvre - Série métrique - Spécification technique

Luft- und Raumfahrt - Rohrverschraubung 8°30' bis 28 000 kPa - Dichtlippe - Metrische Reihe - Technische Lieferbedingungen

This European Standard was approved by CEN on 11 January 2001.

CEN members are bound to comply with the CEN/CENELEC Internal Regulations which stipulate the conditions for giving this European Standard the status of a national standard without any alteration. Up-to-date lists and bibliographical references concerning such national standards may be obtained on application to the Management Centre or to any CEN member.

This European Standard exists in three official versions (English, French, German). A version in any other language made by translation under the responsibility of a CEN member into its own language and notified to the Management Centre has the same status as the official versions.

CEN members are the national standards bodies of Austria, Belgium, Czech Republic, Denmark, Finland, France, Germany, Greece, Iceland, Ireland, Italy, Luxembourg, Malta, Netherlands, Norway, Portugal, Spain, Sweden, Switzerland and United Kingdom.

EUROPEAN COMMITTEE FOR STANDARDIZATION
COMITÉ EUROPÉEN DE NORMALISATION
EUROPÄISCHES KOMITEE FÜR NORMUNG

Management Centre: rue de Stassart, 36 B-1050 Brussels

© 2002 CEN All rights of exploitation in any form and by any means reserved worldwide for CEN national Members.

Ref. No. EN 3275:2002 E

This is a free page sample. Access the full version online.

Contents

Foreword 3
1 Scope 4
2 Normative references 4
3 Symbols 5
4 Terms and definitions 5
5 Requirements, inspection and test methods 7
6 Quality assurance 21
7 Preparation for delivery 22
Annex A (normative) Production batch identification 27

This is a free page sample. Access the full version online.

Foreword

This document (EN 3275:2002) has been prepared by the European Association of Aerospace Manufacturers (AECMA).

After enquiries and votes carried out in accordance with the rules of this Association, this Standard has received the approval of the National Associations and the Official Services of the member Countries of AECMA, prior to its presentation to CEN.

This European Standard shall be given the status of a national standard, either by publication of an identical text or by endorsement, at the latest by October 2002, and conflicting national standards shall be withdrawn at the latest by October 2002.

According to the CEN/CENELEC Internal Regulations, the national standards organizations of the following countries are bound to implement this European Standard; Austria, Belgium, Czech Republic, Denmark, Finland, France, Germany, Greece, Iceland, Ireland, Italy Luxembourg, Malta, Netherlands, Norway, Portugal, Spain, Sweden, Switzerland and United Kingdom.

This is a free page sample. Access the full version online.

1 Scope

This standard specifies the required characteristics, inspection and test methods, quality assurance and procurement requirements for metric series 8°30' dynamic beam seal pipe couplings, for temperature ranges type II and III according to ISO 6771 and nominal pressure up to 28 000 kPa.

2 Normative references

This European Standard incorporates by dated or undated reference provisions from other publications. These normative references are cited at the appropriate places in the text and the publications are listed hereafter. For dated references, subsequent amendments to or revisions of any of these publications apply to this European Standard only when incorporated in it by amendment or revision. For undated references, the latest edition of the publication referred to applies (including amendments).

ISO 468, *Surface roughness — Parameters, their values and general rules for specifying requirements.*

ISO 2685, *Aircraft — Environmental test procedure for airborne equipment — Resistance to fire in designated fire zones.*

ISO 2859-1, *Sampling procedures for inspection by attributes — Part 1: Sampling schemes indexed by acceptance quality limit (AQL) for lot-by-lot-inspection.*

ISO 6771, *Aerospace — Fluid systems and components — Pressure and temperature classifications.*

ISO 6772, *Aerospace — Fluid systems — Impulse testing of hydraulic hose, tubing and fitting assemblies.*

ISO 7137, *Aircraft — Environmental conditions and test procedures for airborne equipment.*

ISO 7257, *Aircraft — Hydraulic tubing joints and fittings — Rotary flexure test.*

ISO 8625-1, *Aerospace — Fluid systems — Vocabulary — Part 1: General terms and definitions relating to pressure.*

ISO 9538, *Aerospace — Hydraulic tubing joints and fittings — Planar flexure test.*

EN 2813, *Aerospace series — Aluminium alloy AL-P6061-T6 — Drawn tube for pressure applications - 0,6 mm ≤ a ≤ 12,5 mm.*[1])

EN 3042, *Aerospace series — Quality assurance — EN aerospace products — Qualification procedure.*

EN 3120, *Aerospace series — Titanium alloy TI-P64003 — Cold worked and stress relieved — Seamless tube for pressure systems — 4 mm ≤ D ≤ 51 mm -690 MPa ≤ R_m ≤ 1 030 MPa.*[1])

EN 10204, *Metallic products — Types of inspection documents.*

TR 2674, *Aerospace series — Design and construction of pipelines for fluids in liquid or gaseous condition — Rigid lines, installation.*[2])

MIL-H-5606, *Hydraulic fluid, Petroleum Base, Aircraft, Missile and Ordnance.*[3])

MIL-H-8446, *Hydraulic fluid, Nonpetroleum Base, Aircraft.*[3])

---

[1]) Published as AECMA Prestandard at the date of publication of this standard

[2]) Published as AECMA Technical Report at the date of publication of this standard

[3]) Published by: Department of Defense (DoD), the Pentagon, Washington, D.C. 20301.

This is a free page sample. Access the full version online.

3 Symbols

A Elongation, in percent

D_0 Actual outside diameter of pipe, in millimetres

D_1 Actual inside diameter of pipe, in millimetres

DN Nominal outside diameter of pipe

P Working pressure, in megapascals

R_m Tensile strength, in megapascals

$R_{p0,2}$ 0,2 % proof stress, in megapascals

σ_x Axial stress due to pressure, in megapascals

4 Terms and definitions

For the purposes of this standard, the following terms and definitions apply:

4.1 Pressure

Nominal pressure, proof pressure, impulse pressure, burst pressure according to ISO 8625-1.

4.2 Coupling

4.2.1
Coupling assembly
assembled and torque-tightened nut, ferrule and pipe mating with e.g. unions, tees or elbows (See figure 1)

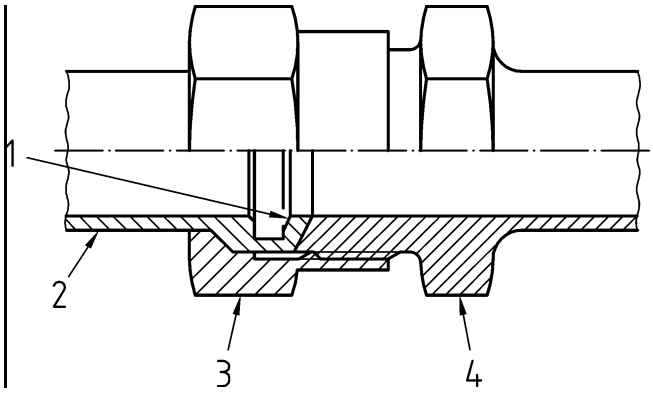

Key
1 Dynamic beam seal
2 Ferrule
3 Nut
4 Union end

Figure 1 — Example of coupling assembly

4.2.2
Straight coupling
union connecting pipe to pipe

SAI GLOBAL

This is a free preview. Purchase the entire publication at the link below:

Product Page

Looking for additional Standards? Visit Intertek Inform Infostore

Learn about LexConnect, All Jurisdictions, Standards referenced in Australian legislation