This is a free page sample. Access the full version online.

NSAI Standards

Irish Standard
I.S. EN 61029-2-4:2011

Safety of transportable motor-operated electric tools -- Part 2-4: Particular requirements for bench grinders (IEC 61029-2-4:1993 (MOD) + A1:2001 (MOD))

© NSAI 2011 No copying without NSAI permission except as permitted by copyright law.

This is a free page sample. Access the full version online.

I.S. EN 61029-2-4:2011

Incorporating amendments/corrigenda issued since publication:

The National Standards Authority of Ireland (NSAI) produces the following categories of formal documents:

I.S. xxx: Irish Standard – national specification based on the consensus of an expert panel and subject to public consultation.

S.R. xxx: Standard Recommendation - recommendation based on the consensus of an expert panel and subject to public consultation.

SWiFT xxx: A rapidly developed recommendatory document based on the consensus of the participants of an NSAI workshop.

This document replaces:	*This document is based on:*	*Published:*
EN 61029-2-4:2003 □ corr. Apr.2003 □ A1:2003	EN 61029-2-4:2011	28 January, 2011

This document was published under the authority of the NSAI and comes into effect on:	ICS number:
14 February, 2011	25.140.20 25.080.50

NSAI
1 Swift Square,
Northwood, Santry
Dublin 9

T □353 1 807 3800
F □353 1 807 3838
E standards□ nsai.ie

W **NSAI.ie**

Sales:
T □353 1 857 6730
F □353 1 857 6729
W standards.ie

□dar□s um Chaighde□in N□isi□nta na h□ireann

This is a free page sample. Access the full version online.

EUROPEAN STANDARD

NORME EUROPÉENNE

EUROPÄISCHE NORM

EN 61029-2-4

January 2011

ICS 25.140.20; 25.080.50

Supersedes EN 61029-2-4:2003 + corr. Apr.2003 + A1:2003

English version

Safety of transportable motor-operated electric tools - Part 2-4: Particular requirements for bench grinders

(IEC 61029-2-4:1993, modified + A1:2001, modified)

Sécurité des machines-outils électriques semi-fixes - Partie 2-4: Règles particulières pour les tourets à meuler (CEI 61029-2-4:1993, modifiée + A1:2001, modifiée)

Sicherheit transportabler motorbetriebener Elektrowerkzeuge - Teil 2-4: Besondere Anforderungen für Tischschleifmaschinen (IEC 61029-2-4:1993, modifiziert + A1:2001, modifiziert)

This European Standard was approved by CENELEC on 2011-01-10. CENELEC members are bound to comply with the CEN/CENELEC Internal Regulations which stipulate the conditions for giving this European Standard the status of a national standard without any alteration.

Up-to-date lists and bibliographical references concerning such national standards may be obtained on application to the Central Secretariat or to any CENELEC member.

This European Standard exists in three official versions (English, French, German). A version in any other language made by translation under the responsibility of a CENELEC member into its own language and notified to the Central Secretariat has the same status as the official versions.

CENELEC members are the national electrotechnical committees of Austria, Belgium, Bulgaria, Croatia, Cyprus, the Czech Republic, Denmark, Estonia, Finland, France, Germany, Greece, Hungary, Iceland, Ireland, Italy, Latvia, Lithuania, Luxembourg, Malta, the Netherlands, Norway, Poland, Portugal, Romania, Slovakia, Slovenia, Spain, Sweden, Switzerland and the United Kingdom.

CENELEC

European Committee for Electrotechnical Standardization
Comité Européen de Normalisation Electrotechnique
Europäisches Komitee für Elektrotechnische Normung

Management Centre: Avenue Marnix 17, B - 1000 Brussels

© 2011 CENELEC - All rights of exploitation in any form and by any means reserved worldwide for CENELEC members.

Ref. No. EN 61029-2-4:2011 E

This is a free page sample. Access the full version online.

Foreword

The text of the International Standard IEC 61029-2-4:1993 + A1:2001, prepared by IEC TC 116, Safety of hand-held motor-operated electric tools, together with the common modifications prepared by the Technical Committee CENELEC TC 116, Safety of motor-operated electric tools, was submitted to the formal vote and was approved by CENELEC as EN 61029-2-4 on 2011-01-10.

This document supersedes EN 61029-2-4:2003 + corrigendum April 2003 + A1:2003.

The following dates were fixed:

– latest date by which the EN has to be implemented at national level by publication of an identical national standard or by endorsement	(dop)	2012-01-10
– latest date by which the national standards conflicting with the EN have to be withdrawn	(dow)	2014-01-10

In this document, the common modifications to the International Standard are indicated by a vertical line in the left margin of the text.

This European Standard is divided into two parts:

Part 1 General requirements which are common to most transportable electric motor operated tools (for the purpose of this standard referred to simply as tools) which could come within the scope of this standard;

Part 2 Requirements for particular types of tool which either supplement or modify the requirements given in part 1 to account for the particular hazards and characteristics of these specific tools.

This European Standard has been prepared under a mandate given to CENELEC by the European Commission and the European Free Trade Association and covers essential requirements of the Machinery Directive 2006/42/EC. See Annex ZZ.

Compliance with the relevant clauses of Part 1 together with this Part 2 provides one means of conforming with the specified essential health and safety requirements of the Directive.

For noise and vibration this standard covers the requirements for their measurement, the provision of information arising from these measurements and the provision of information about the personal protective equipment required. Specific requirements for the reduction of the risk arising from noise and vibration through the design of the tool are not given as this reflects the current state of the art.

As with any standard, technical progress will be kept under review so that any developments can be taken into account.

Warning: Other requirements and other EC Directives can be applicable to the products falling within the scope of this standard.

Part 2-4 is to be used in conjunction with EN 61029-1:2009.
Part 2-4 supplements or modifies the corresponding clauses of EN 61029-1, so as to convert it into the European Standard: Safety requirements for transportable bench grinders.

This is a free page sample. Access the full version online.

Where a particular subclause of Part 1 is not mentioned in this Part 2-4, that subclause applies as far as is reasonable. Where this Part 2-4 states "addition", "modification" or "replacement", the relevant text of Part 1 is to be adapted accordingly.

Subclauses, tables and figures which are additional to those in Part 1 are numbered starting from 101. Subclauses, tables and figures which are additional to those in IEC 61029-2-4 are prefixed "Z".

NOTE In this European Standard the following print types are used:
- Requirements proper;
- *Test specifications;*
- Explanatory matter.

This is a free page sample. Access the full version online.

Contents

1 Scope 6
2 Terms and definitions 6
3 General requirement 7
4 General notes on tests 7
5 Rating 7
6 Classification 7
7 Marking 7
8 Protection against electric shock 8
9 Starting 8
10 Input and current 8
11 Heating 8
12 Leakage current 8
13 Environmental requirements 9
14 Protection against ingress of foreign bodies and moisture resistance 9
15 Insulation resistance and electric strength 9
16 Endurance 9
17 Abnormal operation 9
18 Stability and mechanical hazards 9
19 Mechanical strength 15
20 Construction 15
21 Internal wiring 15
22 Components 15
23 Supply connection and external flexible cables and cords 15
24 Terminals for external conductors 15
25 Provision for earthing 16
26 Screws and connections 16
27 Creepage distances, clearances and distance through insulation 16
28 Resistance to heat, fire and tracking 16
29 Resistance to rusting 16
30 Radiation 16

Figures

Figure 101 – Bench grinder 17
Figure 102 − Schema 18
Figure 103 – Guard 19
Figure 104 – Bench grinder equipped with straight-sided cup wheels 20
Figure 105 − Bench grinder with inclinable work rest 21
Figure 106 – Transparent screen 21
Figure 107 – Combined bench grinder 22
Figure 108 – Flange dimensions 23
Figure 109 – Protection of the rotating shaft 23

This is a free page sample. Access the full version online.

Figure Z101 – Mechanical strength 24
Figure Z102 – Guard for brush 24

Tables

Table Z101 − Guard thickness for steel 10
Table Z102 − Guard thickness for aluminium 10
Table Z103 − Material specifications 11
Table 101 – Flange dimensions (see Figure 108) 13
Table Z104 − Test torque for flanges 13

This is a free page sample. Access the full version online.

Text of EN 61029-2-4

The text of this European Standard consists of the text of the International Standard IEC 61029-2-4:1993 + A1:2001 with the following common modifications.

COMMON MODIFICATIONS

1 Scope

This clause of Part 1 is applicable except as follows:

1.1 *Addition:*

This standard applies to transportable bench grinders (see Figure 101) and combined bench grinders (see Figure 107) with a wheel diameter and brush diameter not exceeding 200 mm, a thickness not exceeding 30 mm and a peripheral speed not exceeding 50 m/s, as defined in 2.101 and 2.107.

The requirements for bonded abrasive products (wheel) are given in EN 12413. The requirements for brushes are given in EN 1083-2.

Stationary grinding machines are covered by EN 13218.

Bench grinders where the wheel partly runs in a water reservoir are not considered as tools with water supply.

2 Terms and definitions

This clause of Part 1 is applicable except as follows:

2.21
normal load
the load to obtain rated input

2.101
bench grinder
tool designed to grind metal or similar materials by means of one or two rotating abrasive wheels fixed on the tool spindle, the work piece being held by hand (see Figure 101)

2.102
accessory
device or piece other than a grinding wheel intended to be mounted on the bench grinder spindle

2.103
tool spindle
motor spindle of the bench grinder or of the combined bench grinder which supports the brush and/or grinding wheels and transports the rotation to them

2.104
guard for wheel
device which partially encloses the abrasive wheel in order to protect the user against accidental contact with the wheel in normal use and against ejection of fragments of the wheel in the protected area in case of breakage of the wheel

This is a free page sample. Access the full version online.

SOMMAIRE

Pages

AVANT-PROPOS 4

Articles

1 Domaine d'application 6
2 Définitions 6
3 Prescription générale 8
4 Généralités sur les essais 10
5 Caractéristiques nominales 10
6 Classification 10
7 Marques et indications 10
8 Protection contre les chocs électriques 12
9 Démarrage 12
10 Puissance et courant 12
11 Echauffements 12
12 Courant de fuite 12
13 Réduction des perturbations de radiodiffusion et de télévision 12
14 Protection contre l'introduction de corps étrangers et résistance à l'humidité 12
15 Résistance d'isolement et rigidité diélectrique 12
16 Endurance 12
17 Fonctionnement anormal 12
18 Stabilité et dangers mécaniques 14
19 Résistance mécanique 26
20 Construction 28
21 Conducteurs internes 28
22 Eléments constituants 28
23 Raccordement au réseau et câbles souples extérieurs 28
24 Bornes pour conducteurs externes 28
25 Dispositions en vue de la mise à la terre 28
26 Vis et connexions 28
27 Lignes de fuite, distances dans l'air et distances à travers l'isolation 28
28 Résistance à la chaleur, au feu et aux courants de cheminement 28
29 Protection contre la rouille 28
30 Rayonnements 28

Annexes 30

This is a free page sample. Access the full version online.

CONTENTS

Page

FOREWORD 5

Clause

1 Scope 7
2 Definitions 7
3 General requirement 9
4 General notes on tests 11
5 Rating 11
6 Classification 11
7 Marking 11
8 Protection against electric shock 13
9 Starting 13
10 Input and current 13
11 Heating 13
12 Leakage current 13
13 Radio and television interference suppression 13
14 Protection against ingress of foreign bodies and moisture resistance 13
15 Insulation resistance and electric strength 13
16 Endurance 13
17 Abnormal operation 13
18 Stability and mechanical hazards 15
19 Mechanical strength 27
20 Construction 29
21 Internal wiring 29
22 Components 29
23 Supply connection and external flexible cables and cords 29
24 Terminals for external conductors 29
25 Provision for earthing 29
26 Screws and connections 29
27 Creepage distances, clearances and distances through insulation 29
28 Resistance to heat, fire and tracking 29
29 Resistance to rusting 29
30 Radiation 29

Annexes 31

This is a free page sample. Access the full version online.

COMMISSION ÉLECTROTECHNIQUE INTERNATIONALE

SÉCURITÉ DES MACHINES-OUTILS ÉLECTRIQUES SEMI-FIXES

Partie 2: Règles particulières pour les tourets à meuler

AVANT-PROPOS

1) La CEI (Commission Electrotechnique Internationale) est une organisation mondiale de normalisation composée de l'ensemble des comités électrotechniques nationaux (Comités nationaux de la CEI). La CEI a pour objet de favoriser la coopération internationale pour toutes les questions de normalisation dans les domaines de l'électricité et de l'électronique. A cet effet, la CEI, entre autres activités, publie des Normes internationales. Leur élaboration est confiée à des comités d'études, aux travaux desquels tout Comité national intéressé par le sujet traité peut participer. Les organisations internationales, gouvernementales et non gouvernementales, en liaison avec la CEI, participent également aux travaux. La CEI collabore étroitement avec l'Organisation Internationale de Normalisation (ISO), selon des conditions fixées par accord entre les deux organisations.

2) Les décisions ou accords officiels de la CEI en ce qui concerne les questions techniques, préparés par les comités d'études où sont représentés tous les Comités nationaux s'intéressant à ces questions, expriment dans la plus grande mesure possible un accord international sur les sujets examinés.

3) Ces décisions constituent des recommandations internationales publiées sous forme de normes, de rapports techniques ou de guides et agréées comme telles par les Comités nationaux.

4) Dans le but d'encourager l'unification internationale, les Comités nationaux de la CEI s'engagent à appliquer de façon transparente, dans toute la mesure possible, les Normes internationales de la CEI dans leurs normes nationales et régionales. Toute divergence entre la norme de la CEI et la norme nationale ou régionale correspondante doit être indiquée en termes clairs dans cette dernière.

La présente partie de la Norme internationale CEI 1029 a été établie par le sous-comité 61F: Sécurité des outils électroportatifs à moteur, du comité d'études 61 de la CEI: Sécurité des appareils électrodomestiques et analogues.

Le texte de cette partie est issu des documents suivants:

DIS	Rapport de vote
61F(BC)91	61F(BC)99

Le rapport de vote indiqué dans le tableau ci-dessus donne toute information sur le vote ayant abouti à l'approbation de cette partie.

La présente partie 2 doit être utilisée conjointement avec la première édition de la CEI 1029-1.

La présente partie 2 complète ou modifie les articles correspondants de la CEI 1029-1 de façon à la transformer en norme CEI: Règles de sécurité pour les tourets à meuler semi-fixes.

Lorsqu'un paragraphe particulier de la première partie n'est pas mentionné dans cette partie 2, ce paragraphe s'applique pour autant qu'il est raisonnable. Lorsque la présente norme spécifie «addition», «modification» ou «remplacement», le texte correspondant de la première partie doit être adapté en conséquence.

NOTES

1 Les caractères d'imprimerie suivants sont employés:

- prescriptions: caractères romains;
- *modalités d'essai: caractères italiques;*
- notes: petits caractères romains;

Les termes définis à l'article 2 figurent **en caractères gras**.

2 Les paragraphes, notes et les figures complémentaires à ceux de la première partie, sont numérotés à partir de 101.

This is a free page sample. Access the full version online.

INTERNATIONAL ELECTROTECHNICAL COMMISSION

SAFETY OF TRANSPORTABLE MOTOR-OPERATED ELECTRIC TOOLS

Part 2: Particular requirements for bench grinders

FOREWORD

1) The IEC (International Electrotechnical Commission) is a worldwide organization for standardization comprising all national electrotechnical committees (IEC National Committees). The object of the IEC is to promote international cooperation on all questions concerning standardization in the electrical and electronic fields. To this end and in addition to other activities, the IEC publishes International Standards. Their preparation is entrusted to technical committees; any IEC National Committee interested in the subject dealt with may participate in this preparatory work. International, governmental and non-governmental organizations liaising with the IEC also participate in this preparation. The IEC collaborates closely with the International Organization for Standardization (ISO) in accordance with conditions determined by agreement between the two organizations.
2) The formal decisions or agreements of the IEC on technical matters, prepared by technical committees on which all the National Committees having a special interest therein are represented, express, as nearly as possible, an international consensus of opinion on the subjects dealt with.
3) They have the form of recommendations for international use published in the form of standards, technical reports or guides and they are accepted by the National Committees in that sense.
4) In order to promote international unification, IEC National Committees undertake to apply IEC International Standards transparently to the maximum extent possible in their national and regional standards. Any divergence between the IEC Standard and the corresponding national or regional standard shall be clearly indicated in the latter.

This part of International Standard IEC 1029 has been prepared by subcommittee 61F: Safety of hand-held motor-operated electric tools, of IEC technical committee 61: Safety of household and similar electrical appliances.

The text of this part is based on the following documents:

DIS	Report on Voting
61F(CO)91	61F(CO)99

Full information on the voting for the approval of this part can be found in the report on voting indicated in the above table.

This part 2 is to be used in conjunction with the first edition of IEC 1029-1.

This part 2 supplements or modifies the corresponding clauses in IEC 1029-1, so as to convert it into the IEC Standard: Safety requirements for transportable bench grinders.

Where a particular subclause of part 1 is not mentioned in this part 2, that subclause applies as far as is reasonable. Where this standard states "addition", "modification" or "replacement", the relevant text in part 1 is to be adapted accordingly.

NOTES

1 The following print types are used:
- requirements: in roman type;
- *test specifications: in italic type;*
- notes: in small roman type

The terms defined in clause 2 are printed in **bold typeface**.

2 Subclauses, notes and figures which are additional to those in part 1 are numbered starting from 101.

This is a free page sample. Access the full version online.

SÉCURITÉ DES MACHINES-OUTILS ÉLECTRIQUES SEMI-FIXES

Partie 2: Règles particulières pour les tourets à meuler

1 Domaine d'application

L'article de la première partie est applicable avec l'exception suivante:

1.1 *Modification:*

Remplacer le premier alinéa par:

La présente Norme internationale s'applique aux tourets à meuler semi-fixes dont la meule a un diamètre maximal de 200 mm et une vitesse circonférentielle maximale de 50 m/s, comme cela est spécifié en 2.101.

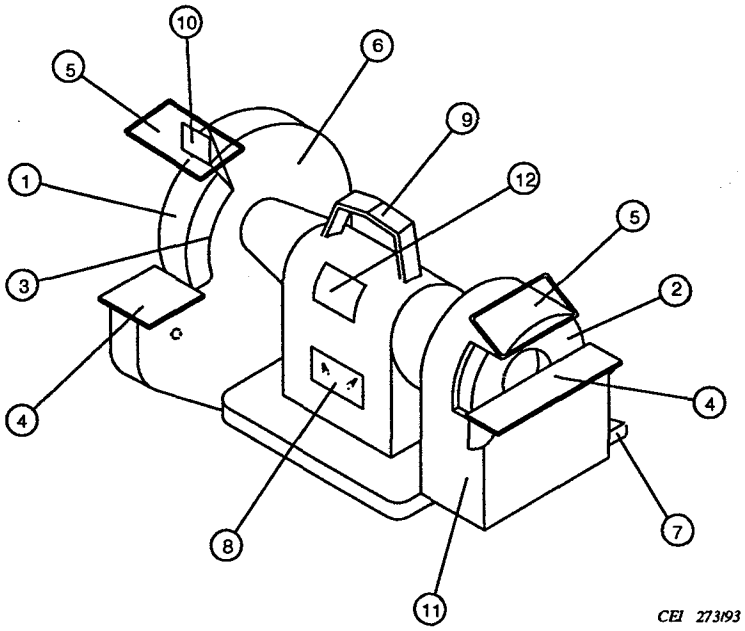

1 = meule plate
2 = meule lapidaire
3 = bride
4 = dispositif de maintien de pièces
5 = écran transparent
6 = dispositif de protection de la meule plate
7 = buse d'aspiration de poussière
8 = dispositif de marche arrêt
9 = poignée
10 = pare-étincelles
11 = dispositif de protection de la meule lapidaire
12 = plaque signalétique

Figure 101 – Touret à meuler

NOTE - Le schéma est uniquement fourni à titre indicatif.

2 Définitions

L'article de la première partie est applicable avec les exceptions suivantes:

2.21 *Remplacement:*

charge normale: Charge obtenue quand l'outil fonctionne d'une façon continue, le couple appliqué à l'axe étant tel que la puissance absorbée, en watts, soit égale à la puissance nominale.

This is a free page sample. Access the full version online.

SAFETY OF TRANSPORTABLE MOTOR-OPERATED ELECTRIC TOOLS

Part 2: Particular requirements for bench grinders

1 Scope

This clause of part 1 is applicable except as follows:

1.1 *Modification:*

Replace the first paragraph by:

This International Standard applies to transportable bench grinders with a wheel diameter not exceeding 200 mm and a peripheral speed not exceeding 50 m/s, as defined in 2.101.

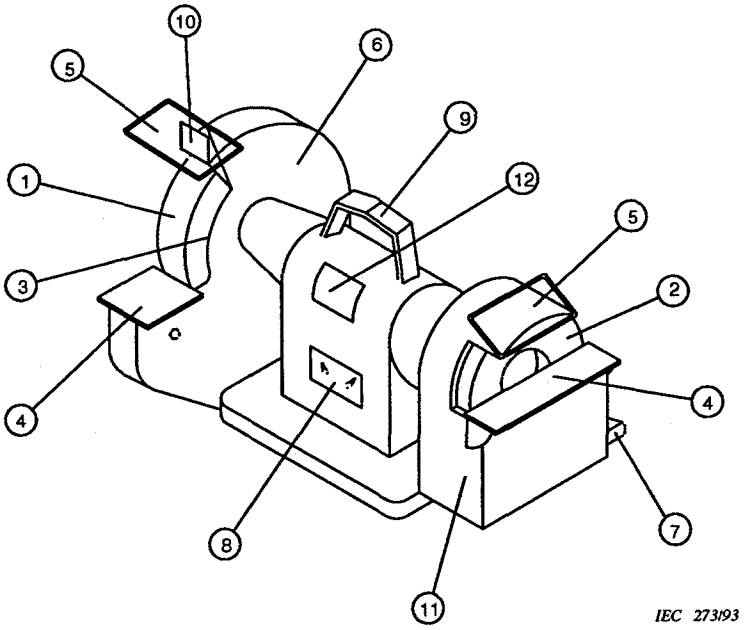

1 = straight-sided grinding wheel
2 = straight-sided cup wheel
3 = flange
4 = work rest
5 = transparent screen
6 = guard for straight-sided wheel
7 = nozzle for dust
8 = on/off device
9 = handle
10 = spark arrestor
11 = cup wheel guard
12 = marking plate

Figure 101 – Bench grinder

NOTE - The drawing is given as a guide only.

2 Definitions

This clause of part 1 is applicable except as follows:

2.21 *Replacement:*

normal load: Load obtained when the tool is operated continuously, the torque applied to the spindle being such that the input, in watts, is equal to the rated input.

SAI GLOBAL

This is a free preview. Purchase the entire publication at the link below:

Product Page

Looking for additional Standards? Visit Intertek Inform Infostore

Learn about LexConnect, All Jurisdictions, Standards referenced in Australian legislation