This is a free page sample. Access the full version online.

NSAI Standards

Irish Standard
I.S. EN 13077:2008

Devices to prevent pollution by backflow of potable water - Air gap with non-circular overflow (unrestricted) - Family A - Type B

© NSAI 2008 No copying without NSAI permission except as permitted by copyright law.

This is a free page sample. Access the full version online.

I.S. EN 13077:2008

Incorporating amendments/corrigenda issued since publication:

This standard replaces:	*This standard is based on:*	*Published:*
I.S. EN 13077:2003	EN 13077:2008 EN 13077:2003	25 June, 2008 19 December, 2003

This Irish Standard was published under the authority of the NSAI and comes into effect on: 13 August, 2008	ICS number: 13.060.20 23.060.99 91.140.60

NSAI
1 Swift Square,
Northwood, Santry
Dublin 9

T +353 1 807 3800
F +353 1 807 3838
E standards@nsai.ie
W **NSAI.ie**

Sales:
T +353 1 857 6730
F +353 1 857 6729
W standards.ie

Price Code:
G

Údarás um Chaighdeáin Náisiúnta na hÉireann

This is a free page sample. Access the full version online.

I.S. EN 13077:2008

EUROPEAN STANDARD

NORME EUROPÉENNE

EUROPÄISCHE NORM

EN 13077

June 2008

ICS 13.060.20; 23.060.99; 91.140.60

Supersedes EN 13077:2003

English Version

Devices to prevent pollution by backflow of potable water - Air gap with non-circular overflow (unrestricted) - Family A - Type B

Dispositif de protection contre la pollution de l'eau potable par retour - Surverse avec trop-plein non-circulaire (to-tale) - Famille A - Type B

Sicherungseinrichtungen zum Schutz des Trinkwassers gegen Verschmutzung durch Rückfließen - Freier Auslauf mit nicht kreisförmigem Überlauf (uneingeschränkt) - Familie A, Typ B

This European Standard was approved by CEN on 29 May 2008.

CEN members are bound to comply with the CEN/CENELEC Internal Regulations which stipulate the conditions for giving this European Standard the status of a national standard without any alteration. Up-to-date lists and bibliographical references concerning such national standards may be obtained on application to the CEN Management Centre or to any CEN member.

This European Standard exists in three official versions (English, French, German). A version in any other language made by translation under the responsibility of a CEN member into its own language and notified to the CEN Management Centre has the same status as the official versions.

CEN members are the national standards bodies of Austria, Belgium, Bulgaria, Cyprus, Czech Republic, Denmark, Estonia, Finland, France, Germany, Greece, Hungary, Iceland, Ireland, Italy, Latvia, Lithuania, Luxembourg, Malta, Netherlands, Norway, Poland, Portugal, Romania, Slovakia, Slovenia, Spain, Sweden, Switzerland and United Kingdom.

EUROPEAN COMMITTEE FOR STANDARDIZATION
COMITÉ EUROPÉEN DE NORMALISATION
EUROPÄISCHES KOMITEE FÜR NORMUNG

Management Centre: rue de Stassart, 36 B-1050 Brussels

© 2008 CEN All rights of exploitation in any form and by any means reserved worldwide for CEN national Members.

Ref. No. EN 13077:2008: E

This is a free page sample. Access the full version online.

Contents

Page

Foreword 3

Introduction 4

1 Scope 5

2 Normative references 5

3 Terms and definitions 5

4 Designation 6

5 Symbolization 6

6 Materials 7

7 Requirements 7

8 Marking (not required for site constructed products) 12

9 Technical documents 12

Annex A (informative) **Relationship between h and l for air gap Family A, Type B with rectangular overflow** 13

Annex B (normative) **Alternative overflow arrangements** 14

B.1 General 14

B.2 Horizontal overflow arrangement 14

B.3 Letterbox overflow extension arrangement 15

This is a free page sample. Access the full version online.

Foreword

This document (EN 13077:2008) has been prepared by Technical Committee CEN/TC 164 “Water supply”, the secretariat of which is held by AFNOR.

This European Standard shall be given the status of a national standard, either by publication of an identical text or by endorsement, at the latest by December 2008, and conflicting national standards shall be withdrawn at the latest by December 2008.

Attention is drawn to the possibility that some of the elements of this document may be the subject of patent rights. CEN [and/or CENELEC] shall not be held responsible for identifying any or all such patent rights.

This document supersedes EN 13077:2003.

Compared to the previous edition of the document the following changes have been made:

a) definitions in Clause 3 revised;

b) Annex B on alternative overflow arrangements added;

c) editorial errors corrected.

According to the CEN/CENELEC Internal Regulations, the national standards organizations of the following countries are bound to implement this European Standard: Austria, Belgium, Bulgaria, Cyprus, Czech Republic, Denmark, Estonia, Finland, France, Germany, Greece, Hungary, Iceland, Ireland, Italy, Latvia, Lithuania, Luxembourg, Malta, Netherlands, Norway, Poland, Portugal, Romania, Slovakia, Slovenia, Spain, Sweden, Switzerland and the United Kingdom.

This is a free page sample. Access the full version online.

Introduction

In respect of potential adverse effects on the quality of water intended for human consumption, caused by the product covered by this European Standard:

a) this European Standard provides no information as to whether the product may be used without restriction in any of the Member State of the EU or EFTA;

b) it should be noted that, while awaiting the adoption of verifiable European criteria, existing national regulations concerning the use and/or the characteristics of this product remain in force.

This is a free page sample. Access the full version online.

1 Scope

This European Standard specifies the characteristics and the requirements of air gap with non-circular overflow (unrestricted) Family A, Type B for nominal flow velocity not exceeding 3 m/s. Air gaps are devices for protection of potable water in water installations from pollution. This European Standard applies to air gaps in factory-assembled products and to constructed air gaps in situ, and defines the physico-chemical characteristics of materials of construction used for the purpose and application to ensure compliance with this European Standard during normal working use.

2 Normative references

The following referenced documents are indispensable for the application of this document. For dated references, only the edition cited applies. For undated references, the latest edition of the referenced document (including any amendments) applies.

EN 1717:2000, *Protection against pollution of potable water in water installations and general requirements of devices to prevent pollution by backflow*

3 Terms and definitions

For the purposes of this document, the terms and definitions given in EN 1717:2000 and the following apply.

3.1
air gap with non-circular overflow (unrestricted) Family A, Type B ("AB" air gap)
permanent and vertical distance between the lowest point of the inlet orifice and the critical water level, and whose overflow is non-circular in design

NOTE See Figure 1 for the design principle.

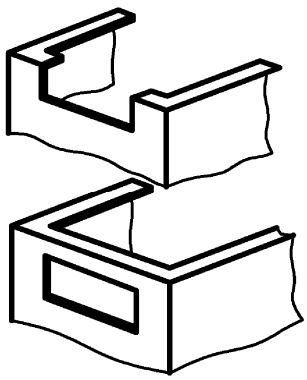

Figure 1 — Design principle

3.2
spillover level
level at which water will start to overflow the receiving vessel with all outlets closed

This is a free page sample. Access the full version online.

3.3
critical water level
physical or piezometric level of the liquid reached in any part of the appliance 2 s after closing the water inlet starting from maximum level

3.4
dimension h
height between the spillover level and the critical level

NOTE See 7.4 for measurement and calculation. For example, see Annex A.

3.5
maximum level
highest water level H reached above the spillover level with flow rate Q applied and all outlets closed

3.6
diameter of feed pipe (bore D)
maximum internal diameter (or calculated from the equivalent cross sectional area) found within the last metre of the supply pipe or the DN of the inlet connection

4 Designation

An air gap with non-circular overflow (unrestricted) Family A, Type B is designated by:

— name;

— reference to this European Standard, i.e. EN 13077;

— family and type;

— denomination (see 3.7 DN or D).

EXAMPLE Air gap, EN 13077, Family A, Type B, DN 15.

5 Symbolization

The graphic representation of the air gap with non-circular overflow (unrestricted) Family A, Type B is as follows (see Figure 2).

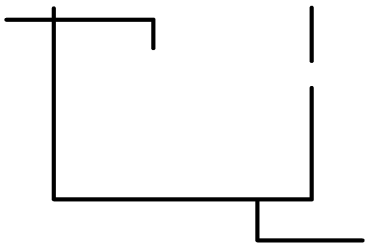

Figure 2 — Graphic symbol

This is a free page sample. Access the full version online.

6 Materials

The manufacturer shall state the type of materials chosen in his technical and commercial documents.

The materials used in water installations, including the materials of protection units in contact with drinking water, shall satisfy the European Standards and national acceptance criteria and/or national restrictions for use currently in force in EU and EFTA.

They shall be compatible among themselves and with the water supplied and with the fluids or substances that can come into contact with them.

There are no special requirements concerning the materials downstream of the atmospheric outlet opening provided they do not have any harmful effect on the upstream part.

7 Requirements

7.1 General

The protection assembly comprises three parts:

— water inlet device;

— receiving vessel (container);

— non-circular overflow.

7.2 Water inlet device

Every float-operated valve or other device, which controls the inflow of water to a receiving vessel, shall be securely and rigidly fixed to that vessel.

Every feed pipe supplying water to such a valve assembly or other device shall be fixed in its position to prevent it from moving or buckling.

The feed pipe, inlet device and its outlet shall not come into contact in any way with a product from downstream; it shall always be above level H (see Figure 3).

When maintaining the maximum flow rate at normal operating conditions, if contact is observed between the upstream components and the liquid in the receiving vessel due to splashing, foaming or turbulence, the air gap shall be increased to a point where no contact is observed.

This is a free page sample. Access the full version online.

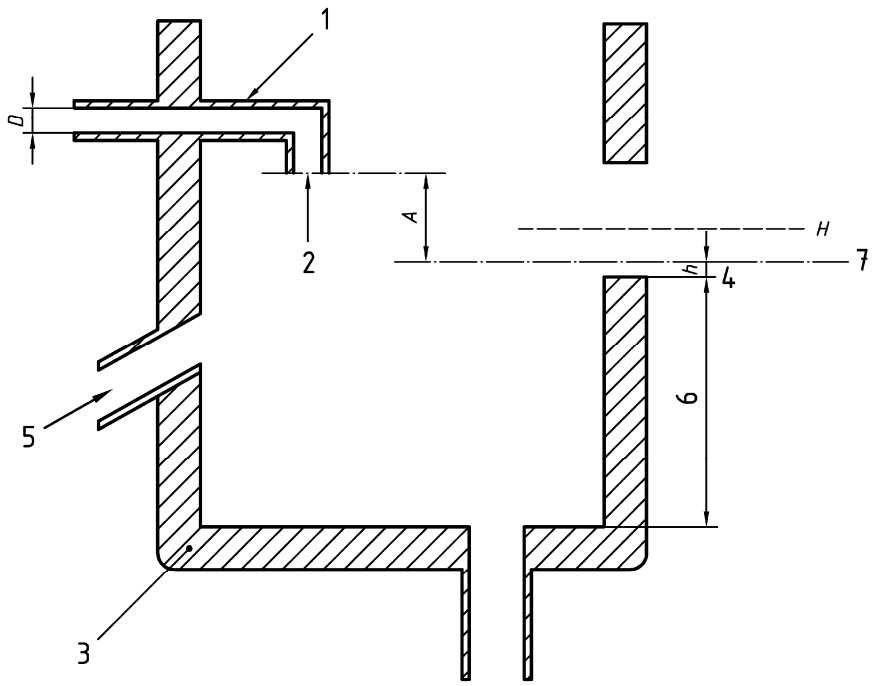

Key

A	air gap (distance)	3	receiving vessel
D	internal diameter of feed pipe (bore)	4	spillover level
H	maximum level	5	optional warning pipe
1	feed pipe	6	$Uw \geq 5h$
2	feed orifice	7	critical water level (distance h)

Figure 3 — Air gap with non-circular overflow (unrestricted) Family A, Type B

7.3 Overflow arrangements

The overflow arrangements shall be of non-circular design, shall discharge immediately into free air and shall be totally unobstructed.

For air gaps Family A, Type B the critical water level shall be established and the air gap distance measured from the lowest point of the water inlet to the critical water level (see 3.3).

The height of the overflow arrangement Ow is $\geq 2D + h$ and never less than 20 mm (see Figures 4 and 5).

This is a free page sample. Access the full version online.

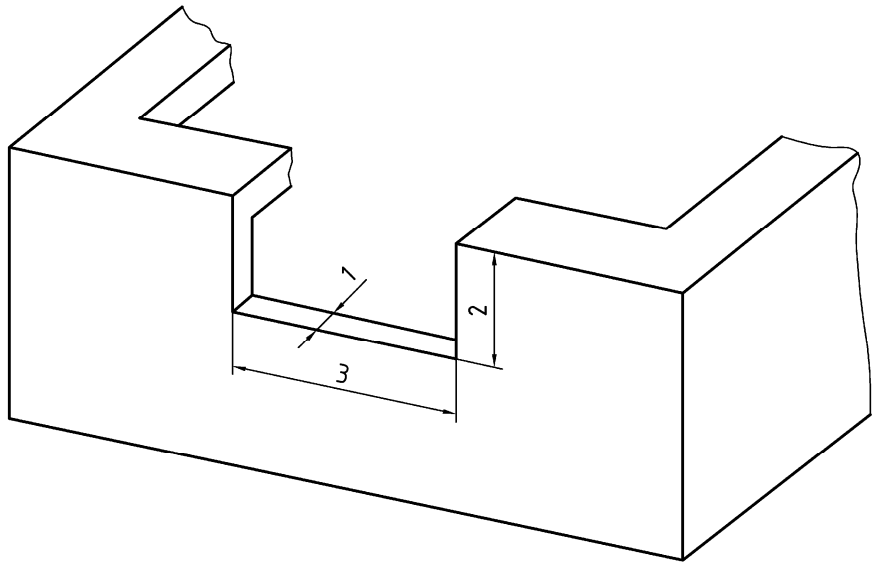

Key

1 $Cw \leq 5\ h$

2 $Ow \geq 2D + h$ and never less than 20 mm

3 $l \geq 10\ h$

Figure 4 — Rectangular overflow arrangement

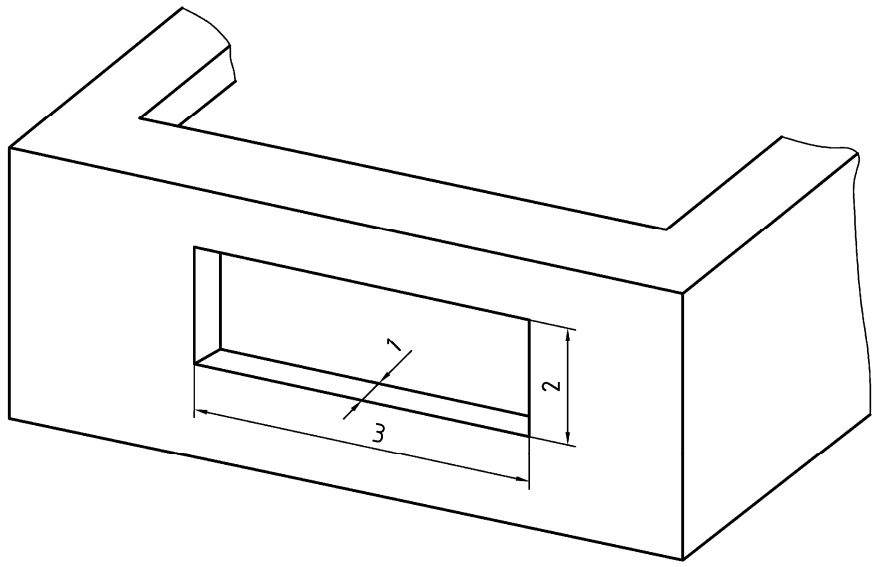

Key

1 $Cw \leq 5\ h$

2 $Ow \geq 2D + h$ and never less than 20 mm

3 $l \geq 10\ h$

Figure 5 — Letterbox overflow arrangement

For multiple inlets D is the largest feed pipe bore diameter.

NOTE There is no relationship between the maximum water level and the top most level of the overflow arrangement. An additional circular warning pipe can also be fitted if required.

This is a free page sample. Access the full version online.

7.4 Air gap distance

7.4.1 Single supply

For air gaps Family A, Type B the critical water level shall be established and the air gap distance A measured from the lowest point of the water inlet to the critical water level (see Figure 3).

The distance A is ≥ 2D and not less than 20 mm and h is determined either by:

a) measurement of the depth of water above the spillover level of the overflow arrangement, 2 s after the inflow equal to Q = 0,14D^2 in litres per minute has stopped or a dynamic pressure of 1 MPa (10 bar) has stopped if the flow rate Q cannot be achieved, where D is the bore of the inlet, (see 3.6) and with all outlets including optional warning pipe (except the overflow arrangement) closed, based on velocity of 3 m/s, or the maximum recommended flow rate for manufactured appliances, when the flow rate is higher than Q;

b) calculating the depth of water above the spillover level of the overflow arrangement using the following equation:

$$h = \sqrt[3]{\left(\frac{10^3 \times Q}{3{,}143 \times l}\right)^2} \qquad (1)$$

where

Q is the inflow in litres per minute at 3 m/s (Q = 0,14 D^2);

l is the width of the overflow arrangement in millimetres.

The calculation is only valid where:

— width (l) is greater than or equal to 10 h at the spillover level;

— crest thickness of the overflow arrangement (Cw) is less than or equal to 5 h;

— upstream face of the overflow arrangement (Uw) is vertical to a depth greater than or equal to 5 h;

— the depth of the overflow arrangement or notch (Ow) is greater than or equal to 2D + h and never less than 20 mm.

When the overflow is not rectangular in design it shall satisfy air gap dimension A by test; see 7.4.1 a).

7.4.2 Multiple supplies

In the case of multiple feed pipes to a single vessel having a non-circular unrestricted overflow, the distance of the air gaps for the potable water supply shall be dimension A above the critical water level. The critical water level (3.3) shall be determined 2 s after stopping the inflow with all feed pipes discharging at an individual inflow calculated at Q = 0,14D^2 in litres per minute. If the flow rate Q cannot be achieved, apply a dynamic pressure of 1 MPa (10 bar) on all inlets. No feed orifice shall be less than distance A above the critical water level. For calculating air gap distance A, use:

$$A = 2\sqrt{\sum D^2} \qquad (2)$$

This is a free page sample. Access the full version online.

7.4.3 Backflow/back pressure

If the receiving vessel can be subject to positive pressure backflow, it is important that the inlet orifice is positioned so that the ascending/returning backflow fluid cannot contaminate it.

When the air gap is part of an installation which can generate positive pressure backflow, it is essential that a means of limiting the flow rate to a rate which shall not compromise the overflow arrangement is incorporated, i.e. non-return valve fitted upstream of the pressurisation unit.

Potable water inlets shall terminate at a higher level than non-potable inlets and never closer than 2 D measured horizontally and vertically downward.

7.5 Verification

7.5.1 General

Verification can be achieved by calculation or by measurement.

7.5.2 Procedure for verification by measurement (see 7.4.1 a) and 7.4.2)

a) Sequence of test:

1) Close all outlets (except the overflow).

2) Identify D.

3) Calculate Q.

4) Apply flow rate Q and maintain maximum water level.

5) Note contact with inlet device(s) during filling and at maximum level.

6) Stop flow rate Q.

7) After 2 s establish distance h.

8) Measure air gap distance between distance h and the lowest point of the feed orifice.

b) Requirements:

1) No contact is possible between the receiving vessel fluid and the inlet device(s).

2) The height Ow shall be $\geq 2D + h$ and never less than 20 mm.

3) The air gap distance A shall be $\geq 2D$ and never less than 20 mm.

7.5.3 Procedures for verification by calculation

See 7.4.1, b).

This is a free page sample. Access the full version online.

8 Marking (not required for site constructed products)

Each appliance incorporating an air gap with non-circular overflow (unrestricted) Family A, Type B shall be clearly and permanently marked and accessibly visible.

Marking shall indicate:

a) manufacturer's brand or logo;

b) letter indicating family and type of air gap;

c) denomination (DN or D);

d) reference to this European Standard, i.e. EN 13077.

Following information to be given where possible:

e) reference (type or model, etc.);

f) serial number.

9 Technical documents

The manufacturer's documentation shall include the appropriate installation requirements to ensure that the air gap is not compromised, including positive pressure backflow.

This is a free page sample. Access the full version online.

Annex A
(informative)

Relationship between h and l for air gap Family A, Type B with rectangular overflow

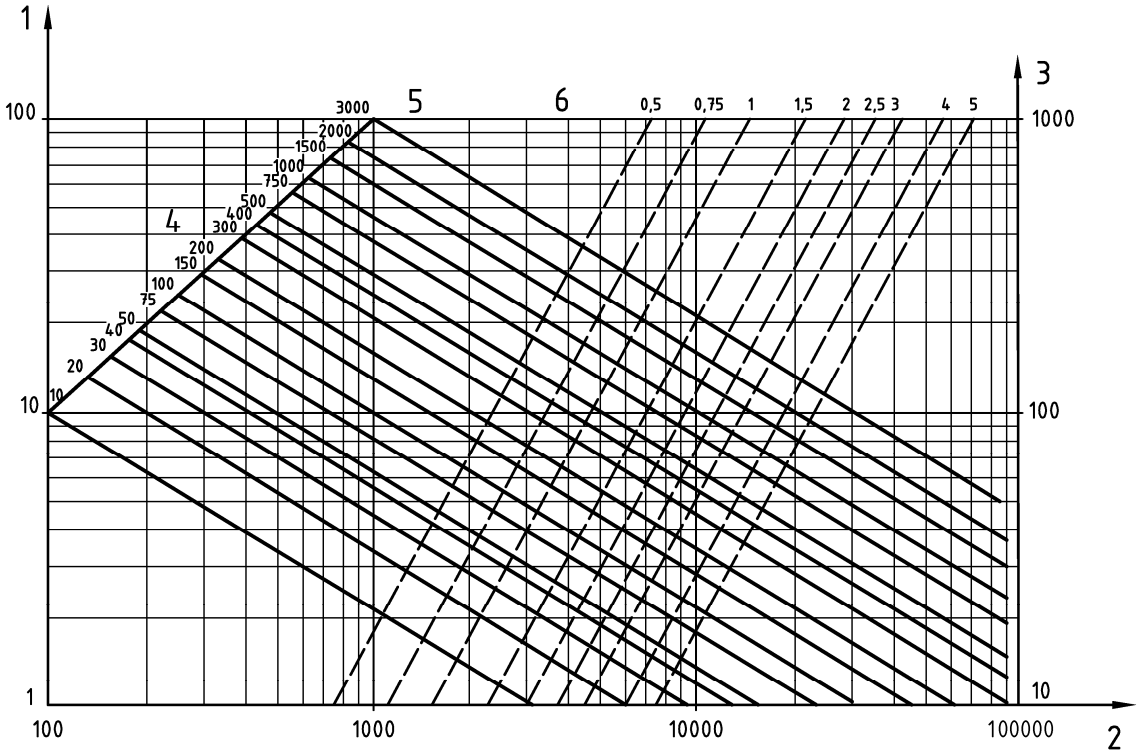

Key

1 depth over overflow arrangement (h) in millimetres
2 overflow width (l) in millimetres
3 pipe bore (D) in millimetres
4 flow (Q) in litres per minute
5 limit of the width of the overflow arrangement l = 10 h
6 velocity (v) in metres per second

Figure A.1 — Relationship between h and l for air gap with rectangular overflow

This is a free page sample. Access the full version online.

Annex B
(normative)

Alternative overflow arrangements

B.1 General

It is the responsibility of testing institutions to verify that any arrangements constructed in this way does not compromise the safety functionality of the air gap. The following figures are examples only.

B.2 Horizontal overflow arrangement

It is accepted that the overflow arrangements detailed in this European Standard can be fabricated internally within the reservoir in the horizontal plane as an alternative arrangement.

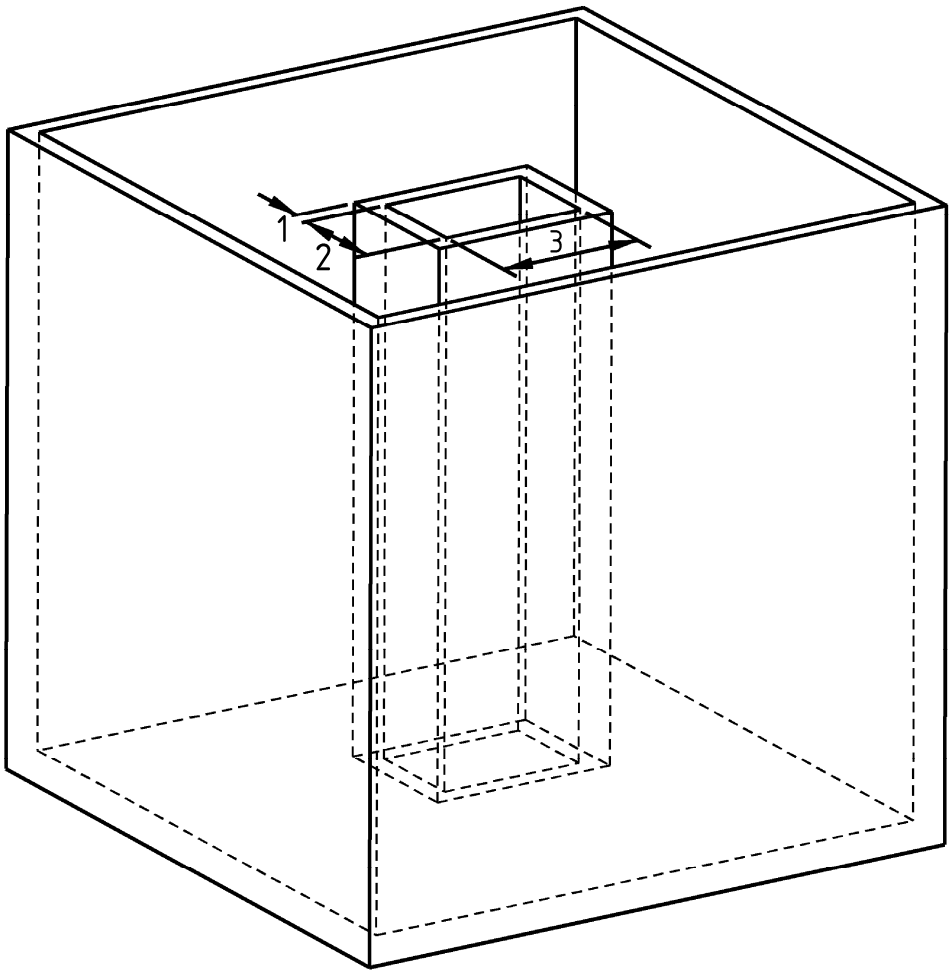

Key

1 $Cw \leq 5h$

2 $Ow \geq 2D + h$ and never less than 20 mm

3 $l \geq 10h$

Figure B.1 — Horizontal overflow arrangement

This is a free page sample. Access the full version online.

B.3 Letterbox overflow extension arrangement

Overflow extensions are permitted only if they comply with the following:

They may change direction only once when leaving the vessel by not more than 90°. They shall not change shape (cross section) and there will be no reduction in dimensions. The horizontal (internal) length of the overflow extension shall never exceed the width *l* defined in Figures 4 and 5. Verification shall be by measurement (test).

Overflow extensions can only be indirectly connected to a drain using an EN 1717 'Air Break to Drain' arrangement.

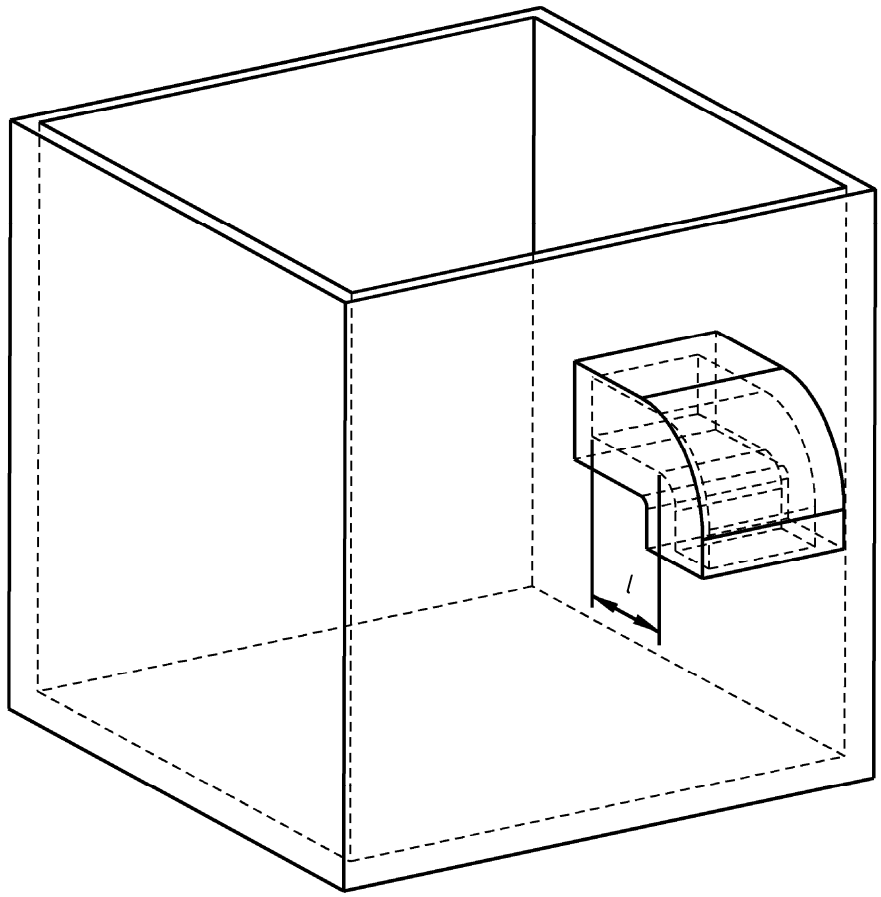

Key
Horizontal length (internal) *l* = see key 3 Figure(s) 4, 5

Figure B.2 — Letterbox overflow extension arrangement

SAI GLOBAL

This is a free preview. Purchase the entire publication at the link below:

Product Page

Looking for additional Standards? Visit Intertek Inform Infostore

Learn about LexConnect, All Jurisdictions, Standards referenced in Australian legislation