This is a free page sample. Access the full version online.

NSAI Standards

Irish Standard
I.S. EN 60745-2-16:2010

Hand-held motor-operated electric tools - Safety -- Part 2-16: Particular requirements for tackers (IEC 60745-2 -16:2008 (MOD))

© NSAI 2010 No copying without NSAI permission except as permitted by copyright law.

This is a free page sample. Access the full version online.

I.S. EN 60745-2-16:2010

Incorporating amendments/corrigenda issued since publication:

The National Standards Authority of Ireland (NSAI) produces the following categories of formal documents:

I.S. xxx: Irish Standard – national specification based on the consensus of an expert panel and subject to public consultation.

S.R. xxx: Standard Recommendation - recommendation based on the consensus of an expert panel and subject to public consultation.

SWiFT xxx: A rapidly developed recommendatory document based on the consensus of the participants of an NSAI workshop.

This document replaces:	*This document is based on:* EN 60745-2-16:2010	*Published:* 29 October, 2010

This document was published under the authority of the NSAI and comes into effect on: 9 November, 2010	ICS number: 25.140.20

NSAI
1 Swift Square,
Northwood, Santry
Dublin 9

T +353 1 807 3800
F +353 1 807 3838
E standards@nsai.ie
W **NSAI.ie**

Sales:
T +353 1 857 6730
F +353 1 857 6729
W standards.ie

Údarás um Chaighdeáin Náisiúnta na hÉireann

This is a free page sample. Access the full version online.

EUROPEAN STANDARD

NORME EUROPÉENNE

EUROPÄISCHE NORM

EN 60745-2-16

October 2010

ICS 25.140.20

Supersedes EN 50144-2-16:2003

English version

Hand-held motor-operated electric tools - Safety - Part 2-16: Particular requirements for tackers

(IEC 60745-2-16:2008, modified)

Outils électroportatifs à moteur - Sécurité - Partie 2-16: Règles particulières pour les agrafeuses (CEI 60745-2-16:2008, modifiée)

Handgeführte motorbetriebene Elektrowerkzeuge - Sicherheit - Teil 2-16: Besondere Anforderungen für Tacker (IEC 60745-2-16:2008, modifiziert)

This European Standard was approved by CENELEC on 2010-10-01. CENELEC members are bound to comply with the CEN/CENELEC Internal Regulations which stipulate the conditions for giving this European Standard the status of a national standard without any alteration.

Up-to-date lists and bibliographical references concerning such national standards may be obtained on application to the Central Secretariat or to any CENELEC member.

This European Standard exists in three official versions (English, French, German). A version in any other language made by translation under the responsibility of a CENELEC member into its own language and notified to the Central Secretariat has the same status as the official versions.

CENELEC members are the national electrotechnical committees of Austria, Belgium, Bulgaria, Croatia, Cyprus, the Czech Republic, Denmark, Estonia, Finland, France, Germany, Greece, Hungary, Iceland, Ireland, Italy, Latvia, Lithuania, Luxembourg, Malta, the Netherlands, Norway, Poland, Portugal, Romania, Slovakia, Slovenia, Spain, Sweden, Switzerland and the United Kingdom.

CENELEC

European Committee for Electrotechnical Standardization
Comité Européen de Normalisation Electrotechnique
Europäisches Komitee für Elektrotechnische Normung

Management Centre: Avenue Marnix 17, B - 1000 Brussels

© 2010 CENELEC - All rights of exploitation in any form and by any means reserved worldwide for CENELEC members.

Ref. No. EN 60745-2-16:2010 E

This is a free page sample. Access the full version online.

Foreword

The text of the International Standard IEC 60745-2-16:2008, prepared by TC 116, Safety of hand-held motor-operated electric tools, together with common modifications prepared by the Technical Committee CENELEC TC 116, Safety of motor-operated electric tools, was submitted to the formal vote and was approved by CENELEC as EN 60745-2-16 on 2010-10-01.

These common modifications are proposed to bring the European Standard in line with the essential health and safety requirements of the Machinery Directive.

This European Standard supersedes EN 50144-2-16:2003.

Attention is drawn to the possibility that some of the elements of this document may be the subject of patent rights. CEN and CENELEC shall not be held responsible for identifying any or all such patent rights.

The following dates were fixed:

– latest date by which the EN has to be implemented at national level by publication of an identical national standard or by endorsement	(dop)	2011-10-01
– latest date by which the national standards conflicting with the EN have to be withdrawn	(dow)	2013-10-01

Other standards referred to in this European Standard are listed in Clause 2. Clause 2 lists the valid edition of those documents at the time of issue of this EN.

This standard is divided into two parts:

Part 1: General requirements which are common to most hand-held electric motor operated tools (for the purpose of this standard referred to simply as tools) which could come within the scope of this standard;

Part 2: Requirements for particular types of tools which either supplement or modify the requirements given in Part 1 to account for the particular hazards and characteristics of these specific tools.

This European Standard has been prepared under Mandate M/396 given to CENELEC by the European Commission and the European Free Trade Association and covers essential requirements of EC Directive 2006/42/EC. See Annex ZZ.

Compliance with the clauses of Part 1 together with this Part 2 provides one means of conforming with the essential health and safety requirements of the Directive concerned.

Warning: Other requirements and other EC Directives can be applicable to the products falling within the scope of this standard.

This standard follows the overall requirements of EN ISO 12100-1 and EN ISO 12100-2.

This Part 2-16 is to be used in conjunction with EN 60745-1. When this standard states "addition", "modification" or "replacement", the relevant text in Part 1 is to be adapted accordingly.

Subclauses and figures which are additional to those in Part 1 are numbered starting from 101.

Subclauses, tables and figures which are additional to those in IEC 60745-2-16 are prefixed “Z”.

NOTE In this standard the following print types are used:
- requirements proper; in roman type
- *test specifications: in italic type;*
- explanatory matter: in smaller roman type.

This is a free page sample. Access the full version online.

Endorsement notice

The text of the International Standard IEC 60745-2-16:2008 was approved by CENELEC as a European Standard with agreed common modifications as given below.

COMMON MODIFICATIONS

2 Normative references

***Replace** the existing text by:*

This clause of Part 1 is applicable, except as follows:

Additional normative references:

EN 28662-1:1992, Hand-held portable power tools – Measurement of vibrations at the handle – Part 1: General (ISO 8662-1:1988)

EN 61672-1:2003, Electroacoustics - Sound level meters - Part 1: Specifications (IEC 61672-1:2002)

EN ISO 11201:1995 [1)], Acoustics - Noise emitted by machinery and equipment – Measurement of emission sound pressure levels at a work station and at other specified positions – Engineering method in an essentially free field over a reflecting plane (ISO 11201:1995)

CEN ISO/TS 15694:2004, Mechanical vibration and shock - Measurement and evaluation of single shocks transmitted from hand-held and hand-guided machines to the hand-arm system (ISO/TS 15694:2004)

***Replace** the existing Clause 6 - Void by the following:*

6 Environmental requirements

This clause of Part 1 is applicable except as follows:

6.1 Noise

Modification:

All sound pressure levels and sound power levels in 6.1 shall be regarded and measured as single event sound pressure levels and single event sound power levels, normalized to 1 s.

6.1.2.4 Installation and mounting conditions of the power tools during noise tests

Modification:

Measurement shall be carried out on a new, properly serviced and lubricated tool observing the conditions shown in Table Z101.

Tackers which are equipped with an impact force adjustment, shall be adjusted to ensure that

- staples are driven tight or flush with surface,
- nails and pins/brads are driven flush with the surface or countersunk up to 1,0 mm.

Either single actuation or contact actuation shall be chosen.

NOTE A single-actuation system is one in which the trigger needs to be actuated for each driving event.

---

1) Superseded by EN ISO 11201:2009 "*Acoustics - Noise emitted by machinery and equipment - Measurement of emission sound pressure levels at a work station and at other specified positions - Engineering method in an essentially free field over a reflecting plane*" (ISO 11201:2005 + corr.1:1997).

This is a free page sample. Access the full version online.

Table Z101 — Operating conditions for tackers

Orientation	The tacker shall be held in the hand driving downwards, the muzzle of the tool in contact with the work piece. During the test, the power tool shall be arranged so that the operator can have an upright, or almost upright, posture and work with his forearm and upper arm at an angle between 100° and 160°. The operator shall be able to hold the power tool comfortable during the test, see Figure Z101. The surface of the work piece shall be arranged so that the geometric centre of the power tool is positioned approximately 1,0 m above the floor, see Figure Z102.
Work piece	The work piece shall be sawn pinewood, free of knots and with a straight grain. The average bulk density shall be in the range of 0,42 g/cm^3 to 0,48 g/cm^3 and the average wood humidity shall be 12 % ± 3 %. The thickness of the work piece shall be at least 1,2 times the length of the longest fastener used. The position of insertion shall be at least 50 mm from the lateral surfaces of the work piece. The work piece shall be supported by a bed of dry sand with the grain of the wood in a horizontal position and so that the surface of the work piece is levelled with the top of the sand. The sand bed shall be of a size of at least 600 mm x 600 mm with a minimum height of 400 mm. The work piece shall be surrounded at all lateral surfaces by a sand layer at least 120 mm wide.
Tool bit	Tackers shall be operated with the largest fasteners intended for the tool.
Force	A vertical force shall be applied, just enough to prevent tool movement caused by bumping.

6.1.2.5 Operating conditions

Replacement of paragraphs 3 to 8:

Tackers are tested for five consecutive driving processes observing the conditions shown in Table Z101, with one driving process per measurement time of 1 s.

6.2 Vibration

6.2.2 Vibration measurement - General

Replacement:

This part specifies a laboratory method for measuring the single-event vibration at the handle where a single event is a mechanical shock or a series of individual shocks at intervals longer than 0,2 s. It is a type test procedure for establishing the vibration value in the handle of a hand-held power tool operating under specified load.

The time-averaged root-mean-square (r.m.s.) acceleration shall be measured with EN 28662-1 presented as a weighted acceleration with 3.3 of EN 28662-1, and normalized to one operation every 3 s.

6.2.4.1 Direction of measurement

Replacement:

These tools do not produce continuous vibration, but single event axis shocks: These single events at the handle are measured in the shock axis only.

NOTE Single shocks are a short burst of vibration, CEN ISO/TS 15694.

This is a free page sample. Access the full version online.

6.2.4.2 Location of measurement

Modification:

Measurement shall be made in a direction parallel with the driving direction, normally the z-direction, see Figure Z103.

Measurements shall be carried out on the handle from which the power tool is triggered, where the operator normally holds his hand.

The transducer shall be mounted as close as possible to the gripping area and be parallel to the driving direction, see Figure Z103.

6.2.4.3 Magnitude of vibration

Paragraphs 5 and 6 are not applicable.

6.2.4.4 Combination of vibration directions

This subclause is not applicable.

6.2.5.2.2 Fastening of transducers

Addition:

The transducer shall only be fastened by glueing.

6.2.6.3 Operating conditions

Modification:

The operating conditions shall be as specified in 6.1.2.5.

One test cycle is given by operating the fastener tool 10 times within a period of 30 s. The time-averaged vibration, $a_{h,w}$ is measured during this time. The result is equivalent to the mean value (of 10) of the time-averaged weighted acceleration normalized to one operation every 3 s, $a_{h,w,3s}$.

6.2.7.1 Reported vibration value

Paragraph 2 is not applicable.

6.2.7.2 Declaration of the vibration total value

Modification:

The vibration value determined is considered to be the vibration total value and shall be declared as follows:

Vibration total value determined according to EN 60745:
Vibration emission value a_h = ... m/s²
Uncertainty K = … m/s²

21 Construction

***Add** the following new subclause:*

21.Z1 This clause of Part 1 is not applicable.

This is a free page sample. Access the full version online.

Add *the following figures:*

Figure Z101 - Working position of operator

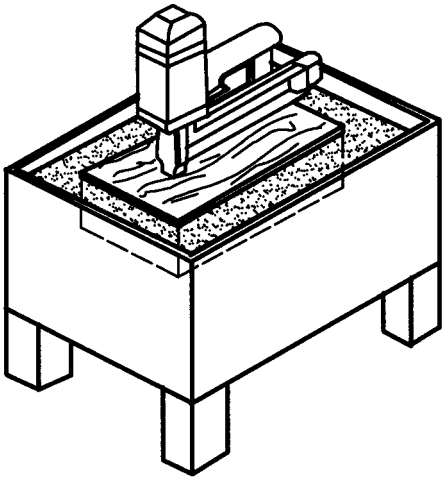

Figure Z102 - Test rig

This is a free page sample. Access the full version online.

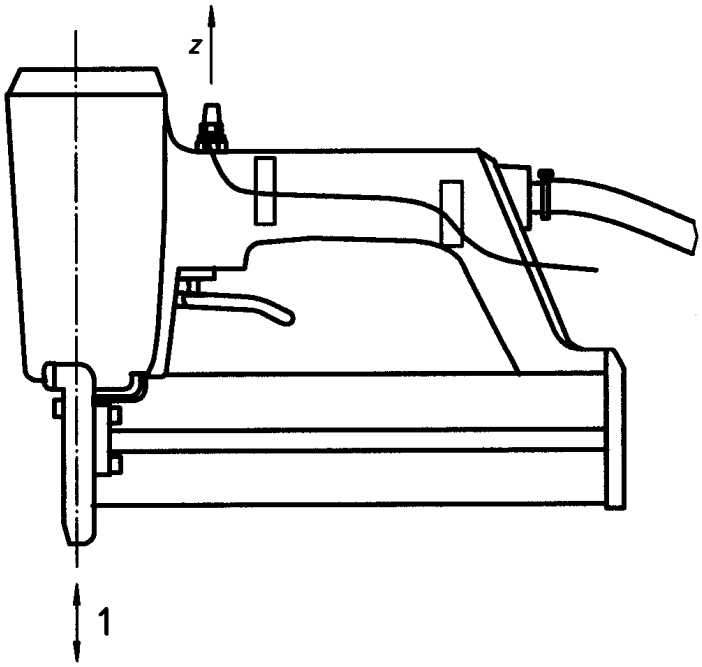

Key

1 Driving direction

Figure Z103 - Measurement direction and position of transducer

This is a free page sample. Access the full version online.

***Add** the following annex:*

Annex ZZ
(informative)

Coverage of Essential Requirements of EC Directive 2006/42/EC

This European Standard has been prepared under a mandate given to CENELEC by the European Commission and the European Free Trade Association and within its scope the standard covers all relevant essential requirements as given in EC Directive 2006/42/EC (Machinery Directive).

Compliance with this standard provides one means of conformity with the specified essential requirements of the Directive concerned.

WARNING: Other requirements and other EC Directives may be applicable to the products falling within the scope of this standard.

This is a free page sample. Access the full version online.

INTERNATIONAL ELECTROTECHNICAL COMMISSION

HAND-HELD MOTOR-OPERATED ELECTRIC TOOLS – SAFETY –

Part 2-16: Particular requirements for tackers

FOREWORD

1) The International Electrotechnical Commission (IEC) is a worldwide organization for standardization comprising all national electrotechnical committees (IEC National Committees). The object of IEC is to promote international co-operation on all questions concerning standardization in the electrical and electronic fields. To this end and in addition to other activities, IEC publishes International Standards, Technical Specifications, Technical Reports, Publicly Available Specifications (PAS) and Guides (hereafter referred to as "IEC Publication(s)"). Their preparation is entrusted to technical committees; any IEC National Committee interested in the subject dealt with may participate in this preparatory work. International, governmental and non-governmental organizations liaising with the IEC also participate in this preparation. IEC collaborates closely with the International Organization for Standardization (ISO) in accordance with conditions determined by agreement between the two organizations.
2) The formal decisions or agreements of IEC on technical matters express, as nearly as possible, an international consensus of opinion on the relevant subjects since each technical committee has representation from all interested IEC National Committees.
3) IEC Publications have the form of recommendations for international use and are accepted by IEC National Committees in that sense. While all reasonable efforts are made to ensure that the technical content of IEC Publications is accurate, IEC cannot be held responsible for the way in which they are used or for any misinterpretation by any end user.
4) In order to promote international uniformity, IEC National Committees undertake to apply IEC Publications transparently to the maximum extent possible in their national and regional publications. Any divergence between any IEC Publication and the corresponding national or regional publication shall be clearly indicated in the latter.
5) IEC provides no marking procedure to indicate its approval and cannot be rendered responsible for any equipment declared to be in conformity with an IEC Publication.
6) All users should ensure that they have the latest edition of this publication.
7) No liability shall attach to IEC or its directors, employees, servants or agents including individual experts and members of its technical committees and IEC National Committees for any personal injury, property damage or other damage of any nature whatsoever, whether direct or indirect, or for costs (including legal fees) and expenses arising out of the publication, use of, or reliance upon, this IEC Publication or any other IEC Publications.
8) Attention is drawn to the Normative references cited in this publication. Use of the referenced publications is indispensable for the correct application of this publication.
9) Attention is drawn to the possibility that some of the elements of this IEC Publication may be the subject of patent rights. IEC shall not be held responsible for identifying any or all such patent rights.

International Standard IEC 60745-2-16 has been prepared by subcommittee 61F: Safety of hand-held motor-operated electric tools, of IEC technical committee 61: Safety of household and similar electrical appliances.

The text of this standard is based on the following documents:

FDIS	Report on voting
61F/703/FDIS	61F/711/RVD

Full information on the voting for the approval of this standard can be found in the report on voting indicated in the above table.

This second edition cancels and replaces the first edition published in 1993 and constitutes a technical revision. Main changes include Clause 8: Markings and instructions, introducing

This is a free page sample. Access the full version online.

detailed safety warnings; Clause 11: Input and current, introducing specification for rated current and input; Clause 12: Heating, with a modified test cycle; Clause 17: Endurance, with testing based on actuation numbers rather than on time; Clause 18: Abnormal operation, introducing an overload test of Part 1 slightly modified for tackers; Clause 19: Mechanical hazards, with requirements for actuating the tool dependant on the kind of actuation system.

This publication has been drafted in accordance with the ISO/IEC Directives, Part 2.

This part 2 is to be used in conjunction with the latest edition of IEC 60745-1. It was established on the basis of the fourth edition (2006) of that standard.

NOTE 1 When “Part 1” is mentioned in this standard, it refers to IEC 60745-1.

This part 2 supplements or modifies the corresponding clauses in IEC 60745-1, so as to convert that publication into the IEC standard: Particular requirements for tackers.

When a particular subclause of Part 1 is not mentioned in this part 2, that subclause applies as far as is reasonable. When this standard states “addition”, “modification” or “replacement”, the relevant text in Part 1 is to be adapted accordingly.

NOTE 2 The following numbering system is used:

– subclauses, tables and figures that are numbered starting from 101 are additional to those in Part 1;
– unless notes are in a new subclause or involve notes in Part 1, they are numbered starting from 101, including those in a replaced clause or subclause;
– additional annexes are lettered AA, BB, etc.

NOTE 3 The following print types are used:

– requirements: in roman type;
– *test specifications: in italic type;*
– notes: in small roman type.

A list of all parts of the IEC 60745 series, under the general title: *Hand-held motor-operated electric tools – Safety*, can be found on the IEC website.

The committee has decided that the contents of this publication will remain unchanged until the maintenance result date indicated on the IEC web site under "http://webstore.iec.ch" in the data related to the specific publication. At this date, the publication will be

- reconfirmed,
- withdrawn,
- replaced by a revised edition, or
- amended.

SAI GLOBAL

This is a free preview. Purchase the entire publication at the link below:

Product Page

Looking for additional Standards? Visit Intertek Inform Infostore

Learn about LexConnect, All Jurisdictions, Standards referenced in Australian legislation