This is a free page sample. Access the full version online.

NSAI Standards

Irish Standard
I.S. EN ISO 13337:2009

Spring-type straight pins - Slotted, light duty (ISO 13337:2009)

© NSAI 2009 No copying without NSAI permission except as permitted by copyright law.

This is a free page sample. Access the full version online.

I.S. EN ISO 13337:2009

Incorporating amendments/corrigenda issued since publication:

This document replaces:	*This document is based on:*	*Published:*
I.S. EN ISO 13337:1998	EN ISO 13337:2009 EN ISO 13337:1997	15 June, 2009 19 June, 1998

This document was published under the authority of the NSAI and comes into effect on: 19 August, 2009	ICS number: 21.060.50

NSAI
1 Swift Square,
Northwood, Santry
Dublin 9

T +353 1 807 3800
F +353 1 807 3838
E standards@nsai.ie
W **NSAI.ie**

Sales:
T +353 1 857 6730
F +353 1 857 6729
W standards.ie

Price Code:
F

Údarás um Chaighdeáin Náisiúnta na hÉireann

This is a free page sample. Access the full version online.

EUROPEAN STANDARD

NORME EUROPÉENNE

EUROPÄISCHE NORM

EN ISO 13337

June 2009

ICS 21.060.50

Supersedes EN ISO 13337:1997

English Version

Spring-type straight pins - Slotted, light duty (ISO 13337:2009)

Goupilles cylindriques creuses, dites goupilles élastiques - Série mince (ISO 13337:2009)

Spannstifte (-hülsen) - Geschlitzt, leichte Ausführung (ISO 13337:2009)

This European Standard was approved by CEN on 6 June 2009.

CEN members are bound to comply with the CEN/CENELEC Internal Regulations which stipulate the conditions for giving this European Standard the status of a national standard without any alteration. Up-to-date lists and bibliographical references concerning such national standards may be obtained on application to the CEN Management Centre or to any CEN member.

This European Standard exists in three official versions (English, French, German). A version in any other language made by translation under the responsibility of a CEN member into its own language and notified to the CEN Management Centre has the same status as the official versions.

CEN members are the national standards bodies of Austria, Belgium, Bulgaria, Cyprus, Czech Republic, Denmark, Estonia, Finland, France, Germany, Greece, Hungary, Iceland, Ireland, Italy, Latvia, Lithuania, Luxembourg, Malta, Netherlands, Norway, Poland, Portugal, Romania, Slovakia, Slovenia, Spain, Sweden, Switzerland and United Kingdom.

EUROPEAN COMMITTEE FOR STANDARDIZATION
COMITÉ EUROPÉEN DE NORMALISATION
EUROPÄISCHES KOMITEE FÜR NORMUNG

Management Centre: Avenue Marnix 17, B-1000 Brussels

© 2009 CEN All rights of exploitation in any form and by any means reserved worldwide for CEN national Members.

Ref. No. EN ISO 13337:2009: E

This is a free page sample. Access the full version online.

Contents

Page

Foreword.....3

This is a free page sample. Access the full version online.

Foreword

This document (EN ISO 13337:2009) has been prepared by Technical Committee ISO/TC 2 "Fasteners" in collaboration with Technical Committee CEN/TC 185 “Fasteners” the secretariat of which is held by DIN.

This European Standard shall be given the status of a national standard, either by publication of an identical text or by endorsement, at the latest by December 2009, and conflicting national standards shall be withdrawn at the latest by December 2009.

Attention is drawn to the possibility that some of the elements of this document may be the subject of patent rights. CEN [and/or CENELEC] shall not be held responsible for identifying any or all such patent rights.

This document supersedes EN ISO 13337:1997.

According to the CEN/CENELEC Internal Regulations, the national standards organizations of the following countries are bound to implement this European Standard: Austria, Belgium, Bulgaria, Cyprus, Czech Republic, Denmark, Estonia, Finland, France, Germany, Greece, Hungary, Iceland, Ireland, Italy, Latvia, Lithuania, Luxembourg, Malta, Netherlands, Norway, Poland, Portugal, Romania, Slovakia, Slovenia, Spain, Sweden, Switzerland and the United Kingdom.

Endorsement notice

The text of ISO 13337:2009 has been approved by CEN as a EN ISO 13337:2009 without any modification.

This is a free page sample. Access the full version online.

This page is intentionally left BLANK.

This is a free page sample. Access the full version online.

I.S. EN ISO 13337:2009

INTERNATIONAL STANDARD

ISO 13337

Second edition
2009-06-15

Spring-type straight pins — Slotted, light duty

Goupilles cylindriques creuses, dites goupilles élastiques — Série mince

Reference number
ISO 13337:2009(E)

© ISO 2009

This is a free page sample. Access the full version online.

PDF disclaimer

This PDF file may contain embedded typefaces. In accordance with Adobe's licensing policy, this file may be printed or viewed but shall not be edited unless the typefaces which are embedded are licensed to and installed on the computer performing the editing. In downloading this file, parties accept therein the responsibility of not infringing Adobe's licensing policy. The ISO Central Secretariat accepts no liability in this area.

Adobe is a trademark of Adobe Systems Incorporated.

Details of the software products used to create this PDF file can be found in the General Info relative to the file; the PDF-creation parameters were optimized for printing. Every care has been taken to ensure that the file is suitable for use by ISO member bodies. In the unlikely event that a problem relating to it is found, please inform the Central Secretariat at the address given below.

COPYRIGHT PROTECTED DOCUMENT

© ISO 2009

All rights reserved. Unless otherwise specified, no part of this publication may be reproduced or utilized in any form or by any means, electronic or mechanical, including photocopying and microfilm, without permission in writing from either ISO at the address below or ISO's member body in the country of the requester.

ISO copyright office
Case postale 56 • CH-1211 Geneva 20
Tel. + 41 22 749 01 11
Fax + 41 22 749 09 47
E-mail copyright@iso.org
Web www.iso.org

Published in Switzerland

This is a free page sample. Access the full version online.

Foreword

ISO (the International Organization for Standardization) is a worldwide federation of national standards bodies (ISO member bodies). The work of preparing International Standards is normally carried out through ISO technical committees. Each member body interested in a subject for which a technical committee has been established has the right to be represented on that committee. International organizations, governmental and non-governmental, in liaison with ISO, also take part in the work. ISO collaborates closely with the International Electrotechnical Commission (IEC) on all matters of electrotechnical standardization.

International Standards are drafted in accordance with the rules given in the ISO/IEC Directives, Part 2.

The main task of technical committees is to prepare International Standards. Draft International Standards adopted by the technical committees are circulated to the member bodies for voting. Publication as an International Standard requires approval by at least 75 % of the member bodies casting a vote.

Attention is drawn to the possibility that some of the elements of this document may be the subject of patent rights. ISO shall not be held responsible for identifying any or all such patent rights.

ISO 13337 was prepared by Technical Committee ISO/TC 2, *Fasteners*, Subcommittee SC 10, *Product standards for fasteners*.

This second edition cancels and replaces the first edition (ISO 13337:1997), which has been technically revised.

© ISO 2009 – All rights reserved

This is a free page sample. Access the full version online.

This is a free page sample. Access the full version online.

Spring-type straight pins — Slotted, light duty

1 Scope

This International Standard specifies the characteristics of slotted spring-type straight pins, made of steel or of austenitic or martensitic stainless steel, light duty, with nominal diameter, d_1, from 2 mm to 50 mm inclusive.

NOTE The nominal diameters have been chosen in such a way that pins can be fitted one into the other or combined with pins, heavy duty, in accordance with ISO 8752.

2 Normative references

The following referenced documents are indispensable for the application of this document. For dated references, only the edition cited applies. For undated references, the latest edition of the referenced document (including any amendments) applies.

ISO 3269, *Fasteners — Acceptance inspection*

ISO 4042, *Fasteners — Electroplated coatings*

ISO 6507-1, *Metallic materials — Vickers hardness test — Part 1: Test method*

ISO 8749, *Pins and grooved pins — Shear test*

3 Dimensions

See Figure 1 and Table 1.

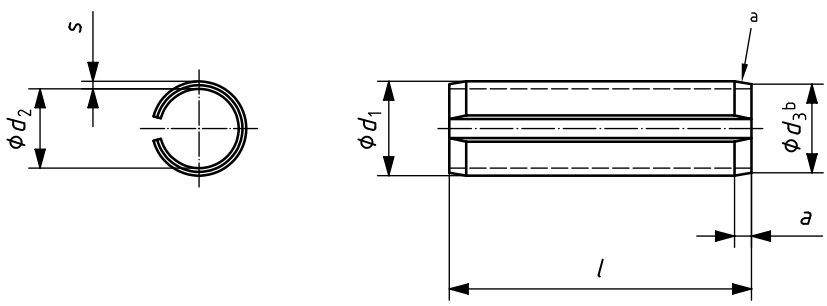

a For slotted spring-type straight pins with a nominal diameter $d_1 \geqslant 10$ mm, a single chamfer configuration is optional at the discretion of the supplier.

b $d_3 < d_{1,\,\mathrm{nom}}$.

NOTE For non-interlocking slotted spring-type straight pins (slot type N), see Clauses 5 and 6.

Figure 1 — Slotted spring-type straight pins, light duty

© ISO 2009 – All rights reserved

SAI GLOBAL

This is a free preview. Purchase the entire publication at the link below:

Product Page

Looking for additional Standards? Visit Intertek Inform Infostore

Learn about LexConnect, All Jurisdictions, Standards referenced in Australian legislation