This is a free page sample. Access the full version online.

NSAI Standards

Irish Standard
I.S. EN 12566-6:2013

Small wastewater treatment systems for up to 50 PT - Part 6: Prefabricated treatment units for septic tank effluent

© CEN 2013 No copying without NSAI permission except as permitted by copyright law.

This is a free page sample. Access the full version online.

I.S. EN 12566-6:2013

Incorporating amendments/corrigenda/National Annexes issued since publication:

The National Standards Authority of Ireland (NSAI) produces the following categories of formal documents:

I.S. xxx: Irish Standard – national specification based on the consensus of an expert panel and subject to public consultation.

S.R. xxx: Standard Recommendation - recommendation based on the consensus of an expert panel and subject to public consultation.

SWiFT xxx: A rapidly developed recommendatory document based on the consensus of the participants of an NSAI workshop.

This document replaces:

This document is based on:
EN 12566-6:2013

Published:
25 February, 2013

This document was published under the authority of the NSAI and comes into effect on:

25 February, 2013

ICS number:

13.060.30

NSAI
1 Swift Square,
Northwood, Santry
Dublin 9

T +353 1 807 3800
F +353 1 807 3838
E standards@nsai.ie

W **NSAI.ie**

Sales:
T +353 1 857 6730
F +353 1 857 6729
W standards.ie

Údarás um Chaighdeáin Náisiúnta na hÉireann

This is a free page sample. Access the full version online.

National Foreword

This Irish Standard is the official English language version of I.S. EN 12566-6:2013, prepared by CEN/TC 165 “Wastewater engineering”.

Where a part of this EN allows for a choice to be made at national level this is addressed in the National document S.R. 66:2015.

If this standard has been changed (revised/amended/corrected) and the National document has yet to be revised to account for the change(s), the National document for the previous version is available. Judgement by a competent person must be applied if using guidance contained therein.

Compliance with an Irish Standard does not of itself confer immunity from legal obligations.

In line with international standards practice the decimal point is shown as a comma (,) throughout this document.

This is a free page sample. Access the full version online.

This page is intentionally left BLANK.

This is a free page sample. Access the full version online.

EUROPEAN STANDARD

NORME EUROPÉENNE

EUROPÄISCHE NORM

EN 12566-6

February 2013

ICS 13.060.30

English Version

Small wastewater treatment systems for up to 50 PT - Part 6: Prefabricated treatment units for septic tank effluent

Petites installations de traitement des eaux usées jusqu'à 50 PTE - Partie 6: Unités préfabriquées de traitement des effluents de fosses septiques

Kleinkläranlagen für bis zu 50 EW - Teil 6: Vorgefertigte Anlagen für die weitergehende Behandlung des aus Faulgruben ablaufenden Abwassers

This European Standard was approved by CEN on 7 December 2012.

CEN members are bound to comply with the CEN/CENELEC Internal Regulations which stipulate the conditions for giving this European Standard the status of a national standard without any alteration. Up-to-date lists and bibliographical references concerning such national standards may be obtained on application to the CEN-CENELEC Management Centre or to any CEN member.

This European Standard exists in three official versions (English, French, German). A version in any other language made by translation under the responsibility of a CEN member into its own language and notified to the CEN-CENELEC Management Centre has the same status as the official versions.

CEN members are the national standards bodies of Austria, Belgium, Bulgaria, Croatia, Cyprus, Czech Republic, Denmark, Estonia, Finland, Former Yugoslav Republic of Macedonia, France, Germany, Greece, Hungary, Iceland, Ireland, Italy, Latvia, Lithuania, Luxembourg, Malta, Netherlands, Norway, Poland, Portugal, Romania, Slovakia, Slovenia, Spain, Sweden, Switzerland, Turkey and United Kingdom.

EUROPEAN COMMITTEE FOR STANDARDIZATION
COMITÉ EUROPÉEN DE NORMALISATION
EUROPÄISCHES KOMITEE FÜR NORMUNG

Management Centre: Avenue Marnix 17, B-1000 Brussels

© 2013 CEN All rights of exploitation in any form and by any means reserved worldwide for CEN national Members.

Ref. No. EN 12566-6:2013: E

This is a free page sample. Access the full version online.

Contents

Page

Foreword 4

1 Scope 6

2 Normative references 6

3 Terms and definitions 7

4 Symbols and abbreviations 8

5 Nominal designation 8

6 Requirements 8
6.1 Design 8
6.1.1 General 8
6.1.2 Overall dimensions 8
6.1.3 Inlets, outlets, internal pipework and connections 9
6.1.4 Access 9
6.2 Load bearing capacity 9
6.2.1 General 9
6.2.2 Load bearing capacity determined by calculation 10
6.2.3 Load bearing capacity determined by testing 10
6.3 Secondary treatment efficiency 11
6.3.1 General 11
6.3.2 Secondary treatment efficiency ratio 11
6.3.3 Micro-organism reduction 12
6.4 Watertightness 12
6.5 Power consumption 12
6.6 Durability 13
6.6.1 General 13
6.6.2 Concrete, steel, PVC-U, PE, GRP 13
6.6.3 PDCPD 13
6.6.4 Flexible sheets 13
6.7 Reaction to fire 14
6.7.1 General 14
6.7.2 Units classified as Class A1 without the need for testing 14
6.7.3 Units classified according to the test results 14
6.8 Dangerous substances 15

7 Evaluation of conformity 15
7.1 General 15
7.2 Initial type testing – Type testing 15
7.2.1 General 15
7.2.2 Sampling, testing and compliance criteria 17
7.2.3 Test reports 17
7.3 Factory production control (FPC) 17
7.3.1 General 17
7.3.2 Requirements 17
7.3.3 Procedure for modifications 19
7.3.4 Initial inspection of factory and of FPC 20
7.3.5 Continuous surveillance of FPC 20

8 Marking 20
8.1 Marking of the unit 20
8.2 Technical information accompanying the unit 20

9 Installation instructions 21

This is a free page sample. Access the full version online.

10 Operation and maintenance instructions 21

Annex A (normative) **Secondary treatment efficiency test procedure** 23
A.1 Selection of the unit and its preliminary evaluation 23
A.1.1 General 23
A.1.2 Installation and commissioning 23
A.1.3 Operation and maintenance procedures during testing 23
A.1.4 Data to be monitored 23
A.2 Test procedure 24
A.2.1 Time for establishment 24
A.2.2 Influent characteristics 24
A.2.3 Daily flow pattern for testing 24
A.2.4 Test method 24
A.2.5 Influent and effluent sampling 26
A.3 Sample analysis 26
A.4 Test report 26

Annex B (normative) **Presentation of the micro-organisms test results** 28

Annex C (informative) **Analysis method** 29

Annex ZA (informative) **Clauses of this European Standard addressing the provisions of the EU Construction Products Directive** 30
ZA.1 Scope and relevant characteristics 30
ZA.2 Procedure of attestation of conformity of prefabricated secondary treatment units 32
ZA.2.1 Systems of attestation of conformity 32
ZA.2.2 EC certificate of conformity and EC declaration of conformity 34
ZA.3 CE marking and labelling 35

Bibliography 38

This is a free page sample. Access the full version online.

Foreword

This document (EN 12566-6:2013) has been prepared by Technical Committee CEN/TC 165 “Wastewater engineering”, the secretariat of which is held by DIN.

This European Standard shall be given the status of a national standard, either by publication of an identical text or by endorsement, at the latest by August 2013, and conflicting national standards shall be withdrawn at the latest by August 2013.

Attention is drawn to the possibility that some of the elements of this document may be the subject of patent rights. CEN [and/or CENELEC] shall not be held responsible for identifying any or all such patent rights.

This document has been prepared under a mandate given to CEN by the European Commission and the European Free Trade Association, and supports essential requirements of EU Directive(s).

For relationship with EU Directive(s), see informative Annex ZA, which is an integral part of this document.

The standard series EN 12566 "*Small wastewater treatment systems for up to 50 PT*" contains the following parts (see Figure 1):

— *Part 1: Prefabricated septic tanks*

— *Part 3: Packaged and/or site assembled domestic wastewater treatment plants*

— *Part 4: Septic tanks assembled in situ from prefabricated kits*

— *Part 6: Prefabricated treatment units for septic tank effluent* (the present document)

— *Part 7: Prefabricated tertiary treatment units* (in preparation)

For filtration and infiltration systems, CEN/TC 165 decided to publish the following CEN Technical Reports, which are considered as Code of Practices and do not specify treatment requirements:

— CEN/TR 12566-2, *Small wastewater treatment systems for up to 50 PT — Part 2: Soil infiltration systems*

— CEN/TR 12566-5, *Small wastewater treatment systems for up to 50 PT — Part 5: Pre-treated effluent filtration systems*

According to the CEN/CENELEC Internal Regulations, the national standards organisations of the following countries are bound to implement this European Standard: Austria, Belgium, Bulgaria, Croatia, Cyprus, Czech Republic, Denmark, Estonia, Finland, Former Yugoslav Republic of Macedonia, France, Germany, Greece, Hungary, Iceland, Ireland, Italy, Latvia, Lithuania, Luxembourg, Malta, Netherlands, Norway, Poland, Portugal, Romania, Slovakia, Slovenia, Spain, Sweden, Switzerland, Turkey and the United Kingdom.

This is a free page sample. Access the full version online.

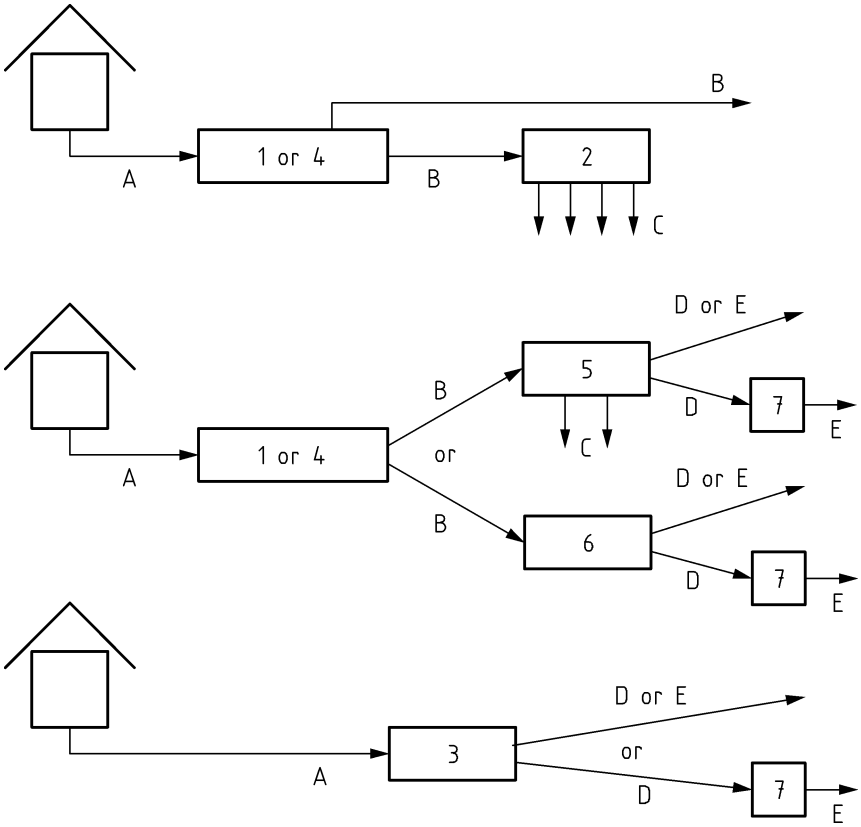

Key

A	raw domestic wastewater	1	prefabricated septic tank
B	septic tank effluent	2	soil infiltration system
C	treated infiltrated effluent	3	packaged and/or site assembled domestic wastewater treatment plant
D	treated wastewater	4	septic tank assembled in situ from prefabricated kit
E	tertiary treated wastewater	5	pre-treated effluent filtration system
		6	prefabricated treatment unit used for septic tank effluent
		7	prefabricated tertiary treatment unit

Figure 1 — Scheme related to the arrangement of the parts of EN 12566 or CEN/TR 12566

NOTE National regulations may specify different arrangements between the products described in the series of EN 12566 and CEN/TR 12566.

This is a free page sample. Access the full version online.

1 Scope

This European Standard specifies requirements, test methods, evaluation of conformity and marking for prefabricated secondary treatment units used for the treatment of effluent from septic tanks according to EN 12566-1 or EN 12566-4 in small wastewater treatment systems for up to 50 PT.

NOTE Equivalent septic effluent may come from existing septic tanks.

It applies to the prefabricated secondary treatment unit, where all its components are packaged or site-assembled and placed on the market as a kit by one manufacturer.

The prefabricated secondary treatment unit consists of one or more tanks made of concrete, steel, unplasticised polyvinylchloride (PVC-U), polyethylene (PE), glass reinforced polyester (GRP-UP), polypropylene (PP), polydicyclopentadiene (PDCPD) or container made of flexible sheets (PEHD, PP, PVC, EPDM). Other components specified by the manufacturer, such as pipes, pumps and filter material will be considered as part of the unit.

This standard establishes the performance of the prefabricated secondary treatment units needed to verify their suitability for the end use conditions for which the test methods are specified.

This standard applies for the packaged and/or site assembled secondary treatment units for use on the top of the ground (outside the building) or buried in the ground where no vehicle loads are applied to the unit.

This standard does not cover:

— non watertight secondary treatment units with direct infiltration into the ground;

— retrofit kits (see definition in 3.7).

2 Normative references

The following referenced documents, in whole or in part, are normatively referenced in this document and are indispensable for its application of this document. For dated references, only the edition cited applies. For undated references, the latest edition of the referenced document (including any amendments) applies.

EN 1085:2007, *Wastewater treatment — Vocabulary*

EN 12566-1, *Small wastewater treatment systems for up to 50 PT — Part 1: Prefabricated septic tanks*

EN 12566-3:2005+A1:2009, *Small wastewater treatment systems for up to 50 PT — Part 3: Packaged and/or site assembled domestic wastewater treatment plants*

EN 12566-4*, Small wastewater treatment systems for up to 50 PT — Part 4: Septic tanks assembled in situ from prefabricated kits*

EN 12311-2, *Flexible sheets for waterproofing — Determination of tensile properties — Part 2: Plastic and rubber sheets for roof waterproofing*

EN 13501-1, *Fire classification of construction products and building elements — Part 1: Classification using data from reaction to fire tests*

EN 14150, *Geosynthetic barriers — Determination of permeability to liquids*

EN ISO 527-1, *Plastics — Determination of tensile properties — Part 1: General principles (ISO 527-1)*

EN ISO 2555, *Plastics — Resins in the liquid state or as emulsions or dispersions — Determination of apparent viscosity by the Brookfield Test method (ISO 2555)*

SAI GLOBAL

This is a free preview. Purchase the entire publication at the link below:

Product Page

Looking for additional Standards? Visit Intertek Inform Infostore

Learn about LexConnect, All Jurisdictions, Standards referenced in Australian legislation