This is a free page sample. Access the full version online.

NSAI Standards

Irish Standard
I.S. EN ISO 28927-8:2009&A1:2015

Hand-held portable power tools - Test methods for evaluation of vibration emission - Part 8: Saws, polishing and filing machines with reciprocating action and saws with oscillating or rotating action (ISO 28927-8:2009)

© CEN 2016 No copying without NSAI permission except as permitted by copyright law.

This is a free page sample. Access the full version online.

I.S. EN ISO 28927-8:2009&A1:2015

Incorporating amendments/corrigenda/National Annexes issued since publication:

EN ISO 28927-8:2009/A1:2015

The National Standards Authority of Ireland (NSAI) produces the following categories of formal documents:

I.S. xxx: Irish Standard — national specification based on the consensus of an expert panel and subject to public consultation.

S.R. xxx: Standard Recommendation — recommendation based on the consensus of an expert panel and subject to public consultation.

SWiFT xxx: A rapidly developed recommendatory document based on the consensus of the participants of an NSAI workshop.

This document replaces/revises/consolidates the NSAI adoption of the document(s) indicated on the CEN/CENELEC cover/Foreword and the following National document(s):

NOTE: The date of any NSAI previous adoption may not match the date of its original CEN/CENELEC document.

This document is based on:	*Published:*
EN ISO 28927-8:2009	2009-12-15

This document was published under the authority of the NSAI and comes into effect on:	ICS number:
2016-01-11	13.160 25.140.10 NOTE: If blank see CEN/CENELEC cover page

NSAI	T +353 1 807 3800	Sales:
1 Swift Square,	F +353 1 807 3838	T +353 1 857 6730
Northwood, Santry	E standards@nsai.ie	F +353 1 857 6729
Dublin 9	W NSAI.ie	W standards.ie

Údarás um Chaighdeáin Náisiúnta na hÉireann

This is a free page sample. Access the full version online.

National Foreword

I.S. EN ISO 28927-8:2009&A1:2015 is the adopted Irish version of the European Document EN ISO 28927-8:2009, Hand-held portable power tools - Test methods for evaluation of vibration emission - Part 8: Saws, polishing and filing machines with reciprocating action and saws with oscillating or rotating action (ISO 28927-8:2009)

This document does not purport to include all the necessary provisions of a contract. Users are responsible for its correct application.

Compliance with this document does not of itself confer immunity from legal obligations.

In line with international standards practice the decimal point is shown as a comma (,) throughout this document.

This is a free page sample. Access the full version online.

This page is intentionally left blank

This is a free page sample. Access the full version online.

EUROPEAN STANDARD

NORME EUROPÉENNE

EUROPÄISCHE NORM

EN ISO 28927-8:2009/A1

December 2015

ICS 25.140.10; 13.160

English Version

Hand-held portable power tools - Test methods for evaluation of vibration emission - Part 8: Saws, polishing and filing machines with reciprocating action and small saws with oscillating or rotating action - Amendment 1: Polishing machines, modified feed forces (ISO 28927-8:2009/Amd 1:2015)

Machines à moteur portatives - Méthodes d'essai pour l'évaluation de l'émission de vibrations - Partie 8: Scies, polisseuses et limes alternatives, et petites scies oscillantes ou circulaires - Amendement 1: Polisseuses, forces d'avance modifiées (ISO 28927-8:2009/Amd 1:2015)

Handgehaltene motorbetriebene Maschinen - Messverfahren zur Ermittlung der Schwingungsemission - Teil 8: Sägen, Feilen und Maschinen für Poliernadeln mit hin- und hergehender Bewegung sowie kleine Sägen mit Schwing- oder Drehbewegung (ISO 28927-8:2009/Amd 1:2015)

This amendment A1 modifies the European Standard EN ISO 28927-8:2009; it was approved by CEN on 6 June 2015.

CEN members are bound to comply with the CEN/CENELEC Internal Regulations which stipulate the conditions for inclusion of this amendment into the relevant national standard without any alteration. Up-to-date lists and bibliographical references concerning such national standards may be obtained on application to the CEN-CENELEC Management Centre or to any CEN member.

This amendment exists in three official versions (English, French, German). A version in any other language made by translation under the responsibility of a CEN member into its own language and notified to the CEN-CENELEC Management Centre has the same status as the official versions.

CEN members are the national standards bodies of Austria, Belgium, Bulgaria, Croatia, Cyprus, Czech Republic, Denmark, Estonia, Finland, Former Yugoslav Republic of Macedonia, France, Germany, Greece, Hungary, Iceland, Ireland, Italy, Latvia, Lithuania, Luxembourg, Malta, Netherlands, Norway, Poland, Portugal, Romania, Slovakia, Slovenia, Spain, Sweden, Switzerland, Turkey and United Kingdom.

EUROPEAN COMMITTEE FOR STANDARDIZATION
COMITÉ EUROPÉEN DE NORMALISATION
EUROPÄISCHES KOMITEE FÜR NORMUNG

CEN-CENELEC Management Centre: Avenue Marnix 17, B-1000 Brussels

© 2015 CEN All rights of exploitation in any form and by any means reserved worldwide for CEN national Members.

Ref. No. EN ISO 28927-8:2009/A1:2015 E

This is a free page sample. Access the full version online.

Contents

Page

European foreword **3**

This is a free page sample. Access the full version online.

European foreword

This document (EN ISO 28927-8:2009/A1:2015) has been prepared by Technical Committee ISO/TC 118 "Compressors and pneumatic tools, machines and equipment" in collaboration with Technical Committee CEN/TC 231 “Mechanical vibration and shock” the secretariat of which is held by DIN.

This Amendment to the European Standard EN ISO 28927-8:2009 shall be given the status of a national standard, either by publication of an identical text or by endorsement, at the latest by June 2016, and conflicting national standards shall be withdrawn at the latest by June 2016.

Attention is drawn to the possibility that some of the elements of this document may be the subject of patent rights. CEN [and/or CENELEC] shall not be held responsible for identifying any or all such patent rights.

This document has been prepared under a mandate given to CEN by the European Commission and the European Free Trade Association, and supports essential requirements of EU Directive(s).

According to the CEN-CENELEC Internal Regulations, the national standards organizations of the following countries are bound to implement this European Standard: Austria, Belgium, Bulgaria, Croatia, Cyprus, Czech Republic, Denmark, Estonia, Finland, Former Yugoslav Republic of Macedonia, France, Germany, Greece, Hungary, Iceland, Ireland, Italy, Latvia, Lithuania, Luxembourg, Malta, Netherlands, Norway, Poland, Portugal, Romania, Slovakia, Slovenia, Spain, Sweden, Switzerland, Turkey and the United Kingdom.

Endorsement notice

The text of ISO 28927-8:2009/Amd 1:2015 has been approved by CEN as EN ISO 28927-8:2009/A1:2015 without any modification.

This is a free page sample. Access the full version online.

Replace the figure with the following Figures and re-number them from Figure 26-29:

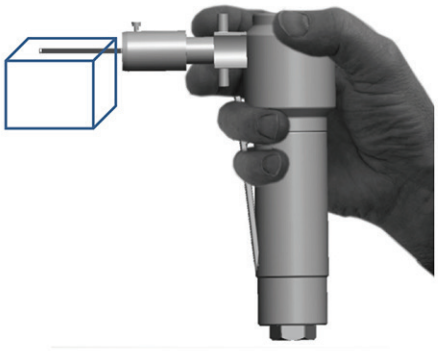

Figure 26 — Operator working position – Angle polishing/filing machine with reciprocating action – Example designed for single hand-held operation

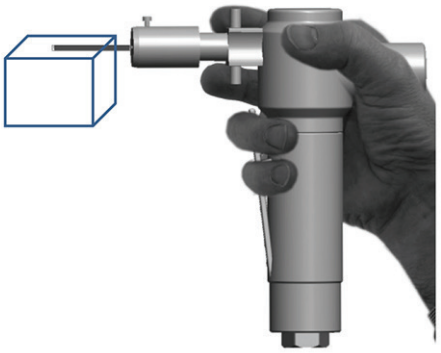

Figure 27 — Operator working position – Angle polishing/filing machine with reciprocating action – Example designed for single hand-held operation – Alternative design

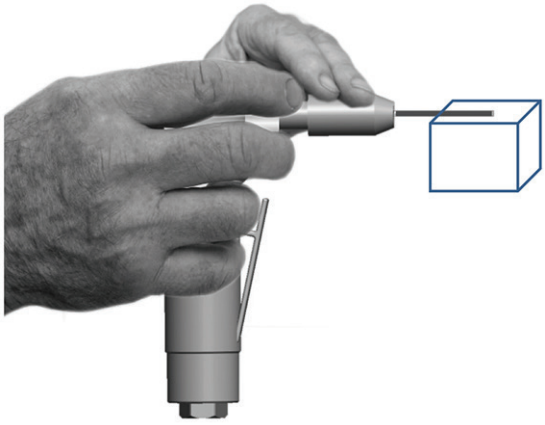

Figure 28 — Operator working position – Angle reciprocating polishing/filing machine with tool holder without moving parts – Example designed for two-handed operation

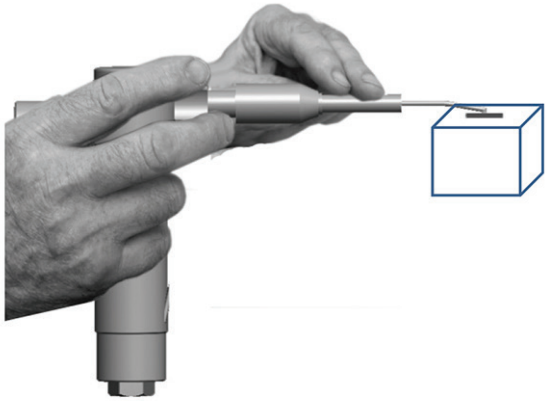

Figure 29 — Operator working position – Angle reciprocating polishing/filing machine with tool holder without moving parts – Example designed for two-handed operation – Alternative design

Page 17, Figure 21

Re-number the Figure to Figure 30

Page 18, Clause 10 bulletpoint f)

Add the text "(and extra tool holder if used)"

Page 18, Clause 10

Add:

l) settings i.e. speed and/or stroke settings

© ISO 2015 – All rights reserved

This is a free page sample. Access the full version online.

ISO 28927-8:2009/Amd.1:2015(E)

ICS 13.160; 25.140.10

Price based on 11 pages

© ISO 2015 – All rights reserved

This is a free page sample. Access the full version online.

EUROPEAN STANDARD

NORME EUROPÉENNE

EUROPÄISCHE NORM

EN ISO 28927-8

December 2009

ICS 13.160; 25.140.10

Supersedes EN ISO 8662-12:1997

English Version

Hand-held portable power tools - Test methods for evaluation of vibration emission - Part 8: Saws, polishing and filing machines with reciprocating action and saws with oscillating or rotating action (ISO 28927-8:2009)

Machines à moteur portatives - Méthodes d'essai pour l'évaluation de l'émission de vibrations - Partie 8: Scies, polisseuses et limes alternatives, et petites scies oscillantes ou circulaires (ISO 28927-8:2009)

Handgehaltene motorbetriebene Maschinen - Messverfahren zur Ermittlung der Schwingungsemission - Teil 8: Sägen, Feilen und Maschinen für Poliernadeln mit hin- und hergehender Bewegung sowie kleine Sägen mit Schwing- oder Drehbewegung (ISO 28927-8:2009)

This European Standard was approved by CEN on 14 December 2009.

CEN members are bound to comply with the CEN/CENELEC Internal Regulations which stipulate the conditions for giving this European Standard the status of a national standard without any alteration. Up-to-date lists and bibliographical references concerning such national standards may be obtained on application to the CEN Management Centre or to any CEN member.

This European Standard exists in three official versions (English, French, German). A version in any other language made by translation under the responsibility of a CEN member into its own language and notified to the CEN Management Centre has the same status as the official versions.

CEN members are the national standards bodies of Austria, Belgium, Bulgaria, Cyprus, Czech Republic, Denmark, Estonia, Finland, France, Germany, Greece, Hungary, Iceland, Ireland, Italy, Latvia, Lithuania, Luxembourg, Malta, Netherlands, Norway, Poland, Portugal, Romania, Slovakia, Slovenia, Spain, Sweden, Switzerland and United Kingdom.

EUROPEAN COMMITTEE FOR STANDARDIZATION
COMITÉ EUROPÉEN DE NORMALISATION
EUROPÄISCHES KOMITEE FÜR NORMUNG

Management Centre: Avenue Marnix 17, B-1000 Brussels

© 2009 CEN All rights of exploitation in any form and by any means reserved worldwide for CEN national Members.

Ref. No. EN ISO 28927-8:2009: E

This is a free page sample. Access the full version online.

Contents

Page

Foreword 3

Annex ZA (informative) Relationship between this European Standard and the Essential Requirements of EU Directive 98/37/EC, amended by Directive 98/79/EC 4

Annex ZB (informative) Relationship between this European Standard and the Essential Requirements of EU Directive 2006/42/EC 5

This is a free page sample. Access the full version online.

Foreword

This document (EN ISO 28927-8:2009) has been prepared by Technical Committee ISO/TC 118 "Compressors and pneumatic tools, machines and equipment" in collaboration with Technical Committee CEN/TC 231 “Mechanical vibration and shock” the secretariat of which is held by DIN.

This European Standard shall be given the status of a national standard, either by publication of an identical text or by endorsement, at the latest by June 2010, and conflicting national standards shall be withdrawn at the latest by June 2010.

Attention is drawn to the possibility that some of the elements of this document may be the subject of patent rights. CEN [and/or CENELEC] shall not be held responsible for identifying any or all such patent rights.

This document supersedes EN ISO 8662-12:1997.

This document has been prepared under a mandate given to CEN by the European Commission and the European Free Trade Association, and supports essential requirements of EU Directives.

For relationship with EU Directives, see informative Annex ZA and ZB, which are integral parts of this document.

According to the CEN/CENELEC Internal Regulations, the national standards organizations of the following countries are bound to implement this European Standard: Austria, Belgium, Bulgaria, Cyprus, Czech Republic, Denmark, Estonia, Finland, France, Germany, Greece, Hungary, Iceland, Ireland, Italy, Latvia, Lithuania, Luxembourg, Malta, Netherlands, Norway, Poland, Portugal, Romania, Slovakia, Slovenia, Spain, Sweden, Switzerland and the United Kingdom.

Endorsement notice

The text of ISO 28927-8:2009 has been approved by CEN as a EN ISO 28927-8:2009 without any modification.

This is a free page sample. Access the full version online.

Annex ZA
(informative)

Relationship between this European Standard and the Essential Requirements of EU Directive 98/37/EC, amended by Directive 98/79/EC

This European Standard has been prepared under a mandate given to CEN by the European Commission and the European Free Trade Association to provide a means of conforming to Essential Requirements of the New Approach Directive 98/37/EC, Machinery, amended by Directive 98/79/EC.

Once this standard is cited in the Official Journal of the European Union under that Directive and has been implemented as a national standard in at least one Member State, compliance with the normative clauses of this standard confers, within the limits of the scope of this standard, a presumption of conformity with the corresponding Essential Requirements of that Directive, except ER 1.7.4 d) and 2.2, and associated EFTA regulations.

WARNING — Other requirements and other EU Directives may be applicable to the products falling within the scope of this standard.

This is a free page sample. Access the full version online.

Annex ZB
(informative)

Relationship between this European Standard and the Essential Requirements of EU Directive 2006/42/EC

This European Standard has been prepared under a mandate given to CEN by the European Commission and the European Free Trade Association to provide one means of conforming to Essential Requirements of the New Approach Directive 2006/42/EC on machinery.

Once this standard is cited in the Official Journal of the European Union under that Directive and has been implemented as a national standard in at least one Member State, compliance with the normative clauses of this standard confers, within the limits of the scope of this standard, a presumption of conformity with the corresponding Essential Requirement of that Directive, except ER 2.2.1.1, and associated EFTA regulations.

WARNING — Other requirements and other EU Directives may be applicable to the product(s) falling within the scope of this standard.

This is a free page sample. Access the full version online.

This page is intentionally left blank

This is a free page sample. Access the full version online.

INTERNATIONAL STANDARD

ISO 28927-8

First edition
2009-12-15

Hand-held portable power tools — Test methods for evaluation of vibration emission —

Part 8: Saws, polishing and filing machines with reciprocating action and small saws with oscillating or rotating action

Machines à moteur portatives — Méthodes d'essai pour l'évaluation de l'émission de vibrations —

Partie 8: Scies, polisseuses et limes alternatives, et petites scies oscillantes ou circulaires

Reference number
ISO 28927-8:2009(E)

© ISO 2009

This is a free page sample. Access the full version online.

PDF disclaimer

This PDF file may contain embedded typefaces. In accordance with Adobe's licensing policy, this file may be printed or viewed but shall not be edited unless the typefaces which are embedded are licensed to and installed on the computer performing the editing. In downloading this file, parties accept therein the responsibility of not infringing Adobe's licensing policy. The ISO Central Secretariat accepts no liability in this area.

Adobe is a trademark of Adobe Systems Incorporated.

Details of the software products used to create this PDF file can be found in the General Info relative to the file; the PDF-creation parameters were optimized for printing. Every care has been taken to ensure that the file is suitable for use by ISO member bodies. In the unlikely event that a problem relating to it is found, please inform the Central Secretariat at the address given below.

COPYRIGHT PROTECTED DOCUMENT

© ISO 2009

All rights reserved. Unless otherwise specified, no part of this publication may be reproduced or utilized in any form or by any means, electronic or mechanical, including photocopying and microfilm, without permission in writing from either ISO at the address below or ISO's member body in the country of the requester.

ISO copyright office
Case postale 56 • CH-1211 Geneva 20
Tel. + 41 22 749 01 11
Fax + 41 22 749 09 47
E-mail copyright@iso.org
Web www.iso.org

Published in Switzerland

This is a free page sample. Access the full version online.

Contents

Page

Foreword iv

Introduction vi

1 Scope 1

2 Normative references 1

3 Terms, definitions and symbols 2
3.1 Terms and definitions 2
3.2 Symbols 2

4 Basic standards and vibration test codes 3

5 Description of the family of machines 3

6 Characterization of vibration 6
6.1 Direction of measurement 6
6.2 Location of measurements 6
6.3 Magnitude of vibration 11
6.4 Combination of vibration directions 11

7 Instrumentation requirements 11
7.1 General 11
7.2 Mounting of transducers 11
7.2.1 Specification of transducer 11
7.2.2 Fastening of transducers 12
7.3 Frequency weighting filter 12
7.4 Integration time 12
7.5 Auxiliary equipment 12
7.6 Calibration 12

8 Testing and operating conditions of the machinery 13
8.1 General 13
8.2 Operating conditions 13
8.2.1 Pneumatic machines 13
8.2.2 Hydraulic machines 13
8.2.3 Electrical machines 13
8.3 Other quantities to be specified 13
8.4 Attached equipment, work piece and task 13
8.4.1 General 13
8.4.2 Test set-up, conditions and procedures 14
8.5 Operators 17

9 Measurement procedure and validity 17
9.1 Reported vibration values 17
9.2 Declaration and verification of the vibration emission value 18

10 Measurement report 18

Annex A (informative) **Model test report for vibration emission of saws and files** 20

Annex B (normative) **Determination of uncertainty** 22

Bibliography 24

© ISO 2009 – All rights reserved

This is a free page sample. Access the full version online.

Foreword

ISO (the International Organization for Standardization) is a worldwide federation of national standards bodies (ISO member bodies). The work of preparing International Standards is normally carried out through ISO technical committees. Each member body interested in a subject for which a technical committee has been established has the right to be represented on that committee. International organizations, governmental and non-governmental, in liaison with ISO, also take part in the work. ISO collaborates closely with the International Electrotechnical Commission (IEC) on all matters of electrotechnical standardization.

International Standards are drafted in accordance with the rules given in the ISO/IEC Directives, Part 2.

The main task of technical committees is to prepare International Standards. Draft International Standards adopted by the technical committees are circulated to the member bodies for voting. Publication as an International Standard requires approval by at least 75 % of the member bodies casting a vote.

Attention is drawn to the possibility that some of the elements of this document may be the subject of patent rights. ISO shall not be held responsible for identifying any or all such patent rights.

ISO 28927-8 was prepared by Technical Committee ISO/TC 118, *Compressors and pneumatic tools, machines and equipment*, Subcommittee SC 3, *Pneumatic tools and machines*.

This first edition of ISO 28927-8 cancels and replaces ISO 8662-12:1997, of which it constitutes a technical revision. The most important changes are

— vibration measurement in three axes and at both hand positions,

— new transducer positions, and

— improved definition of transducer positions and orientation.

ISO 28927 consists of the following parts, under the general title *Hand-held portable power tools — Test methods for evaluation of vibration emission*:

— *Part 1: Angle and vertical grinders*[1)]

— *Part 2: Wrenches, nutrunners and screwdrivers*[2)]

— *Part 3: Polishers and rotary, orbital and random orbital sanders*[3)]

— *Part 4: Straight grinders*[4)]

---

1) Together with Part 4, replaces ISO 8662-4, *Hand-held portable power tools — Measurement of vibrations at the handle — Part 4: Grinders*.

2) Replaces ISO 8662-7, *Hand-held portable power tools — Measurement of vibrations at the handle — Part 7: Wrenches, screwdrivers nut runners with impact, impulse and ratcheting action*. All screwdrivers and nutrunners except for one-shot tools now covered.

3) Replaces ISO 8662-8, *Hand-held portable power tools — Measurement of vibrations at the handle — Part 8: Polishers and rotary, orbital and random orbital sanders*.

4) Together with Part 1, replaces ISO 8662-4, *Hand-held portable power tools — Measurement of vibrations at the handle — Part 4: Grinders*.

© ISO 2009 – All rights reserved

This is a free page sample. Access the full version online.

— *Part 5: Drills and impact drills*[5)]

— *Part 6: Rammers*[6)]

— *Part 7: Nibblers and shears*[7)]

— *Part 8: Saws, polishing and filing machines with reciprocating action and small saws with oscillating or rotating action*

— *Part 9: Scaling hammers and needle scalers*[8)]

— *Part 10: Percussive drills, hammers and breakers*[9)]

— *Part 11: Stone hammers*[10)]

---

5) Replaces ISO 8662-6, *Hand-held portable power tools — Measurement of vibrations at the handle — Part 6: Impact drills.* Non-impacting drills now covered.

6) Replaces ISO 8662-9, *Hand-held portable power tools — Measurement of vibrations at the handle —Part 9: Rammers*.

7) Replaces ISO 8662-10, *Hand-held portable power tools — Measurement of vibrations at the handle — Part 10: Nibblers and shears*.

8) Together with Part 11, replaces ISO 8662-14, *Hand-held portable power tools — Measurement of vibrations at the handle — Part 14: Stone-working tools and needle scalers*.

9) Replaces ISO 8662-2, *Hand-held portable power tools — Measurement of vibrations at the handle — Part 2: Chipping hammers and riveting hammers,* ISO 8662-3, *Hand-held portable power tools — Measurement of vibrations at the handle — Part 3: Rock drills and rotary hammers*, and ISO 8662-5, *Hand-held portable power tools — Measurement of vibrations at the handle — Part 5: Pavement breakers and hammers for construction work*. Chipping and riveting hammers, rock drills and rotary hammers all covered.

10) Together with Part 9, replaces ISO 8662-14, *Hand-held portable power tools — Measurement of vibrations at the handle — Part 14: Stone-working tools and needle scalers*.

© ISO 2009 – All rights reserved

SAI GLOBAL

This is a free preview. Purchase the entire publication at the link below:

Product Page

Looking for additional Standards? Visit Intertek Inform Infostore

Learn about LexConnect, All Jurisdictions, Standards referenced in Australian legislation