This is a free page sample. Access the full version online.

NSAI Standards

Irish Standard
I.S. EN 1538:2010

Execution of special geotechnical work - Diaphragm walls

© NSAI 2010 No copying without NSAI permission except as permitted by copyright law.

This is a free page sample. Access the full version online.

I.S. EN 1538:2010

Incorporating amendments/corrigenda/National Annexes issued since publication:

The National Standards Authority of Ireland (NSAI) produces the following categories of formal documents:

I.S. xxx: Irish Standard – national specification based on the consensus of an expert panel and subject to public consultation.

S.R. xxx: Standard Recommendation - recommendation based on the consensus of an expert panel and subject to public consultation.

SWiFT xxx: A rapidly developed recommendatory document based on the consensus of the participants of an NSAI workshop.

This document replaces:	*This document is based on:*	*Published:*
EN 1538:2000	EN 1538:2010 EN 1538:2000	1 September, 2010 19 January, 2000

This document was published under the authority of the NSAI and comes into effect on: 16 September, 2010	ICS number: 93.020

NSAI
1 Swift Square,
Northwood, Santry
Dublin 9

T +353 1 807 3800
F +353 1 807 3838
E standards@nsai.ie
W NSAI.ie

Sales:
T +353 1 857 6730
F +353 1 857 6729
W standards.ie

Údarás um Chaighdeáin Náisiúnta na hÉireann

This is a free page sample. Access the full version online.

I.S. EN ISO 1538:2010

EUROPEAN STANDARD

NORME EUROPÉENNE

EUROPÄISCHE NORM

EN 1538

September 2010

ICS 93.020

Supersedes EN 1538:2000

English Version

Execution of special geotechnical work - Diaphragm walls

Exécution des travaux géotechniques spéciaux - Parois moulées

Ausführung von Arbeiten im Spezialtiefbau - Schlitzwände

This European Standard was approved by CEN on 2 July 2010.

CEN members are bound to comply with the CEN/CENELEC Internal Regulations which stipulate the conditions for giving this European Standard the status of a national standard without any alteration. Up-to-date lists and bibliographical references concerning such national standards may be obtained on application to the CEN Management Centre or to any CEN member.

This European Standard exists in three official versions (English, French, German). A version in any other language made by translation under the responsibility of a CEN member into its own language and notified to the CEN Management Centre has the same status as the official versions.

CEN members are the national standards bodies of Austria, Belgium, Bulgaria, Croatia, Cyprus, Czech Republic, Denmark, Estonia, Finland, France, Germany, Greece, Hungary, Iceland, Ireland, Italy, Latvia, Lithuania, Luxembourg, Malta, Netherlands, Norway, Poland, Portugal, Romania, Slovakia, Slovenia, Spain, Sweden, Switzerland and United Kingdom.

EUROPEAN COMMITTEE FOR STANDARDIZATION
COMITÉ EUROPÉEN DE NORMALISATION
EUROPÄISCHES KOMITEE FÜR NORMUNG

Management Centre: Avenue Marnix 17, B-1000 Brussels

© 2010 CEN All rights of exploitation in any form and by any means reserved worldwide for CEN national Members.

Ref. No. EN 1538:2010: E

This is a free page sample. Access the full version online.

Contents

Page

Foreword ... 4
1 Scope ... 5
2 Normative references ... 7
3 Terms and definitions ... 8
4 Information needed for the execution of the work ... 10
4.1 General ... 10
4.2 Special features ... 10
5 Geotechnical investigation ... 11
5.1 General ... 11
5.2 Specific requirements ... 12
6 Materials and products ... 13
6.1 Constituents ... 13
6.1.1 General ... 13
6.1.2 Bentonite ... 13
6.1.3 Polymers ... 13
6.1.4 Cement ... 13
6.1.5 Aggregates ... 14
6.1.6 Water ... 14
6.1.7 Additions ... 14
6.1.8 Admixtures ... 15
6.2 Support fluids ... 15
6.2.1 Bentonite suspensions ... 15
6.2.2 Polymer solutions ... 16
6.2.3 Fresh hardening slurries ... 17
6.3 Concrete ... 17
6.3.1 General ... 17
6.3.2 Aggregates ... 17
6.3.3 Cement contents ... 17
6.3.4 Water/cement ratio ... 18
6.3.5 Admixtures ... 18
6.3.6 Fresh concrete ... 18
6.3.7 Production of concrete ... 19
6.3.8 Sampling and testing on site ... 19
6.4 Plastic concrete ... 20
6.5 Hardening slurry ... 20
6.6 Reinforcement ... 20
6.7 Additional inserted products ... 21
7 Considerations related to design ... 21
7.1 General ... 21
7.2 Panel stability ... 22
7.2.1 General considerations ... 22
7.2.2 General principle of design ... 22
7.2.3 Comparable experience ... 23
7.2.4 Stability considerations ... 23
7.2.5 Trial excavation(s) ... 23
7.3 Socketing into rock ... 24
7.4 Precast concrete panels ... 24
7.5 Reinforcement cages ... 24
7.5.1 General considerations ... 24
7.5.2 Design principles ... 24
7.5.3 Vertical reinforcement ... 25
7.5.4 Horizontal reinforcement ... 25

This is a free page sample. Access the full version online.

7.5.5 Multiple cages and joints ... 26
7.6 Recesses and perforations ... 26
7.7 Minimum and nominal cover ... 26

8 Execution ... 27
8.1 Construction phases ... 27
8.2 Construction tolerances ... 27
8.2.1 Panel ... 27
8.2.2 Retaining walls ... 28
8.2.3 Cut-off walls ... 28
8.2.4 Reinforcement cage ... 28
8.3 Preliminary works ... 28
8.3.1 Working platform ... 28
8.3.2 Guide-walls ... 29
8.4 Excavation ... 29
8.4.1 Supporting the walls of the excavation ... 29
8.4.2 Excavation sequence ... 30
8.4.3 Loss of support fluid ... 30
8.5 Cleaning the excavation ... 30
8.6 Forming the joints ... 30
8.7 Placing the reinforcement or other elements ... 31
8.8 Concreting and trimming ... 31
8.8.1 General ... 31
8.8.2 Concreting in dry conditions ... 32
8.8.3 Concreting under support fluid ... 32
8.8.4 Loss of immersion of tremie pipe ... 33
8.8.5 Trimming ... 33

9 Supervision, testing and monitoring ... 34

10 Records ... 35

11 Special requirements ... 35

Annex A (informative) **Glossary** ... 37

Annex B (informative) **Control schedules during the execution** ... 39

Annex C (informative) **Sample concreting record forms for diaphragm walls** ... 45

Annex D (informative) **Degree of obligation of the provisions** ... 46

Bibliography ... 50

This is a free page sample. Access the full version online.

Foreword

This document (EN 1538:2010) has been prepared by Technical Committee CEN/TC 288 “Execution of special geotechnical works”, the secretariat of which is held by AFNOR.

This European Standard shall be given the status of a national standard, either by publication of an identical text or by endorsement, at the latest by March 2011, and conflicting national standards shall be withdrawn at the latest by March 2011.

Attention is drawn to the possibility that some of the elements of this document may be the subject of patent rights. CEN [and/or CENELEC] shall not be held responsible for identifying any or all such patent rights.

This document supersedes EN 1538:2000.

The general scope of TC 288 is the standardisation of the execution procedures for geotechnical works (including testing and control methods), and of the required material properties. WG15 has been charged to revise EN 1538:2000, with the subject area of both retaining and cut-off diaphragm walls. This standard does not address the execution of barrettes, which is covered by EN 1536, *Execution of special geotechnical work — Bored piles*.

The design, planning and execution of retaining and cut-off diaphragm walls call for experience and knowledge in this specialised field. The execution phase requires skilled and qualified personnel and the present standard cannot replace the expertise of specialist contractors.

The document has been prepared to stand alongside EN 1997-1, *Eurocode 7: Geotechnical design — Part 1: General rules* and EN 1997-2, *Eurocode 7: Geotechnical design — Part 2: Ground investigation and testing*. This standard expands on design only where necessary (e.g. the detailing of reinforcement) and provides full coverage of the construction and supervision requirements.

This standard contains additional requirements on concrete complementing the respective provisions of EN 206-1 and of EN 13670. The three standards are not yet fully accorded. It is anticipated that during future revisions several provisions now contained in EN 1538, e.g. in 6.1, 6.3 and 8.8 could be transferred to EN 206-1 and EN 13670.

This document was revised by a working group comprising delegates from 11 European countries. The comments from 13 European countries have been received and taken into account.

According to the CEN/CENELEC Internal Regulations, the national standards organizations of the following countries are bound to implement this European Standard: Austria, Belgium, Bulgaria, Croatia, Cyprus, Czech Republic, Denmark, Estonia, Finland, France, Germany, Greece, Hungary, Iceland, Ireland, Italy, Latvia, Lithuania, Luxembourg, Malta, Netherlands, Norway, Poland, Portugal, Romania, Slovakia, Slovenia, Spain, Sweden, Switzerland and the United Kingdom.

This is a free page sample. Access the full version online.

1 Scope

This European Standard establishes general principles for the execution of diaphragm walls as either retaining walls or cut-off walls.

NOTE 1 This standard covers only structures constructed in a trench excavated with a support fluid or in dry conditions, where soil is removed and replaced by concrete or slurry and with wall thickness $B \geq 40$ cm.

NOTE 2 Diaphragm walls can be permanent or temporary structures.

NOTE 3 The following types of structure are considered:

a) retaining walls: usually constructed to support the sides of an excavation in the ground. They include:

   1) cast in situ concrete diaphragm walls;

   2) precast concrete diaphragm walls;

   3) reinforced slurry walls;

b) cut-off walls: usually constructed to prevent migration of groundwater, clear or polluted, or of other contaminants present in the ground. They include:

   1) slurry walls (possibly with membranes or sheet piles);

   2) plastic concrete walls.

NOTE 4 Walls formed shallow vertical trenches (typically excavations with a ratio of depth over thickness $D/B < 5$ or $D < 5$ m) are not covered by this standard.

This is a free page sample. Access the full version online.

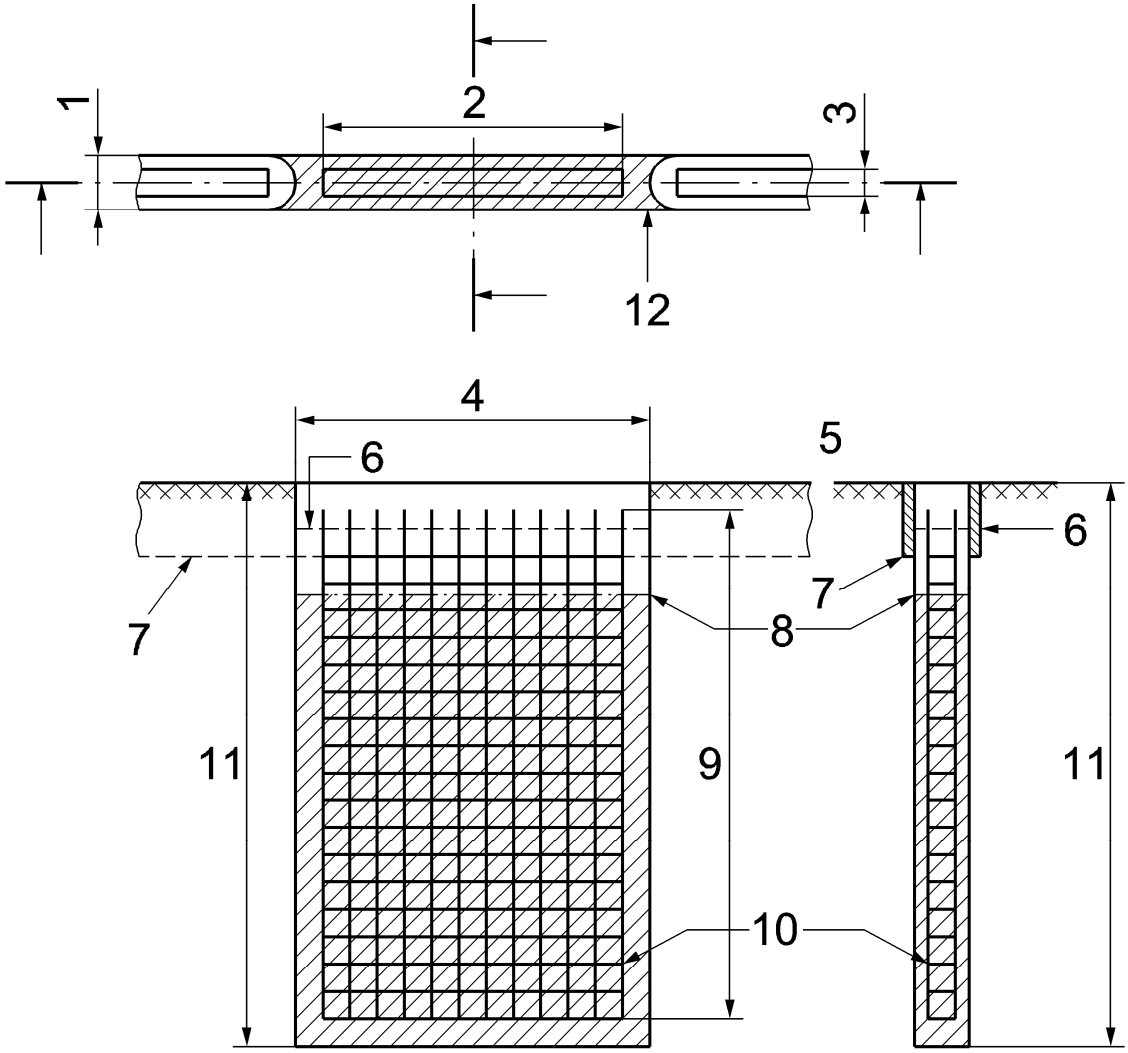

Key

1 Wall thickness (B)
2 Horizontal length of reinforcement cage
3 Cage width
4 Length of panel
5 Platform level
6 Casting level
7 Guide-wall
8 Cut off level
9 Vertical length of reinforcement cage
10 Reinforcement cage
11 Depth of excavation (D)
12 Concave portion of curved joints

Figure 1 — Geometry of a panel

This is a free page sample. Access the full version online.

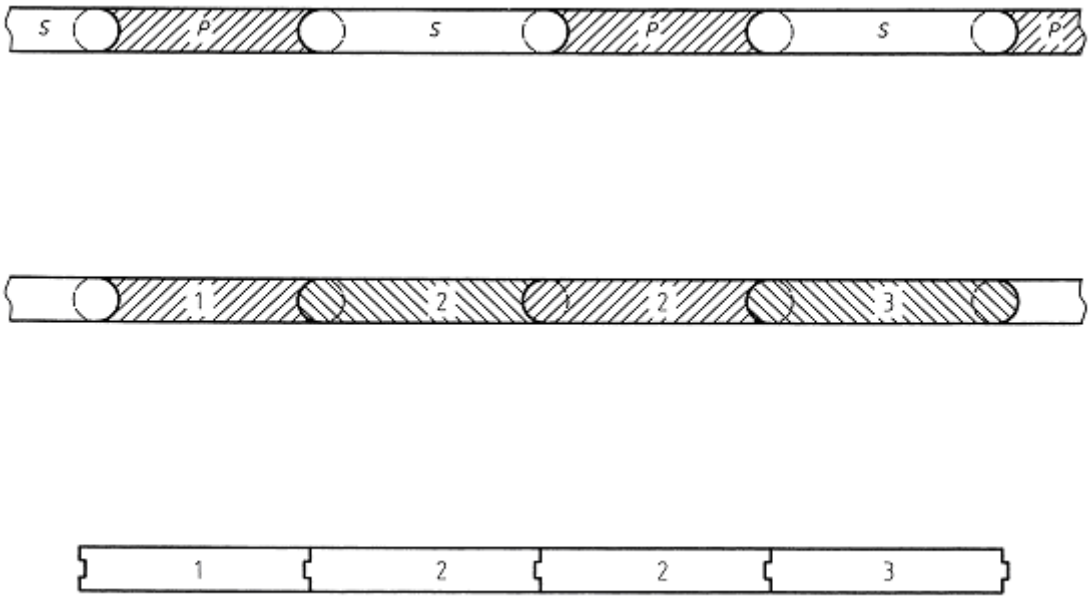

Key

P Primary
S Secondary
1 Starter
2 Intermediate
3 Closure

Figure 2 — Schematic examples of different types of panels and joints (plan view)

2 Normative references

The following referenced documents are indispensable for the application of this document. For dated references, only the edition cited applies. For undated references, the latest edition of the referenced document (including any amendments) applies.

EN 197-1:2000, *Cement — Part 1: Composition, specifications and conformity criteria for common cements*

EN 206-1:2000, *Concrete — Part 1: Specification, performance, production and conformity*

EN 791, *Drill rigs — Safety*

EN 934-2, *Admixtures for concrete, mortar and grout — Part 2: Concrete admixtures — Definitions, requirements, conformity, marking and labelling*

EN 1008, *Mixing water for concrete — Specification for sampling, testing and assessing the suitability of water, including water recovered from processes in the concrete industry, as mixing water for concrete*

EN 1990, *Eurocode — Basis of structural design*

EN 1991 (all parts), *Eurocode 1: Actions on structures*

EN 1992 (all parts), *Eurocode 2: Design of concrete structures*

EN 1997-1, *Eurocode 7: Geotechnical design — Part 1: General rules*

SAI GLOBAL

This is a free preview. Purchase the entire publication at the link below:

Product Page

Looking for additional Standards? Visit Intertek Inform Infostore

Learn about LexConnect, All Jurisdictions, Standards referenced in Australian legislation