This is a free page sample. Access the full version online.

TECHNICAL REPORT

RAPPORT TECHNIQUE

TECHNISCHER BERICHT

CLC/TR 50607-10

November 2015

ICS 33.060.40

English Version

Satellite signal distribution over a single coaxial cable - Part 10: Implementation guideline

Distribution de signaux satellites sur un seul câble coaxial - Partie 10: Lignes directrices de mise en œuvre

Verteilen von Satellitensignalen über ein Koaxialkabel - Teil 10: Anwendungsleitfaden

This Technical Report was approved by CENELEC on 2015-09-14.

CENELEC members are the national electrotechnical committees of Austria, Belgium, Bulgaria, Croatia, Cyprus, the Czech Republic, Denmark, Estonia, Finland, Former Yugoslav Republic of Macedonia, France, Germany, Greece, Hungary, Iceland, Ireland, Italy, Latvia, Lithuania, Luxembourg, Malta, the Netherlands, Norway, Poland, Portugal, Romania, Slovakia, Slovenia, Spain, Sweden, Switzerland, Turkey and the United Kingdom.

European Committee for Electrotechnical Standardization
Comité Européen de Normalisation Electrotechnique
Europäisches Komitee für Elektrotechnische Normung

CEN-CENELEC Management Centre: Avenue Marnix 17, B-1000 Brussels

© 2015 CENELEC All rights of exploitation in any form and by any means reserved worldwide for CENELEC Members.

Ref. No. CLC/TR 50607-10:2015 E

This is a free page sample. Access the full version online.

Contents

Page

European foreword 3
Introduction 4
1 Scope 5
2 Normative references 5
3 Terms, definitions and abbreviations 5
3.1 Terms and definitions 5
3.2 Abbreviations 5
4 Standard applications 5
4.1 General note for all application examples 5
4.2 SCD2 Universal LNB 6
4.3 SCD2 Multi-switch with feed by Quatro LNB 6
4.4 SCD2 LNB with wideband architecture 7
4.5 SCD2 Multi-switch with wideband feed 8
4.6 SCD2 multi-switch (two satellite reception) 9
4.7 SCD2 C-Band LNB 9
4.8 SCD2 Ka-Band LNB (dual wideband hardware) 10
4.9 SCD2 multi-switch with Ka-Band LNB (dual wideband feed) 10
4.10 SCD2 Ka-Band LNB (ultra-wideband hardware) 11
5 Conclusion 11

Figures

Figure 1 — SCD2 Universal- LNB — Example for Ku Band 6
Figure 2 — SCD2 Multi-switch with standard feed by Universal LNB — Example for Ku Band 6
Figure 3 — SCD2 LNB with wideband architecture — Example for Ku Band 7
Figure 4 — SCD2 Multi-switch with wideband feed — Example for Ku Band 8
Figure 5 — SCD2 multi-switch (two-satellite reception) 9
Figure 6 — SCD2 C-Band LNB 9
Figure 7 — SCD2 Ka-Band LNB (dual wideband hardware) 10
Figure 8 — SCD2 multi-switch with Ka-Band LNB (dual wideband feed) 10
Figure 9 — SCD2 Ka-Band LNB (ultra-wideband hardware) 11

This is a free page sample. Access the full version online.

European foreword

This document (CLC/TR 50607-10:2015) has been prepared by CLC/TC 209, “Cable networks for television signals, sound signals and interactive services”.

Attention is drawn to the possibility that some of the elements of this document may be the subject of patent rights. CENELEC [and/or CEN] shall not be held responsible for identifying any or all such patent rights.

This is a free page sample. Access the full version online.

Introduction

EN 50607 specifies the second generation of channel stacking systems for satellite reception. The second generation allows more reception possibilities by increasing the number of user bands and the number of satellite feeds.

This Technical Report provides implementation examples to assist manufacturers and installers of satellite distribution and satellite receiving equipment to implement EN 50607 in the most convenient way and to ease installation of products according to EN 50607.

This is a free page sample. Access the full version online.

1 Scope

This Technical Report describes a number of different satellite reception scenarios and how to use SCD2 here. In particular, Universal and Wideband LNB architectures for different SHF bands (Ku-, Ka- and C-Band) are taken into account.

2 Normative references

The following documents, in whole or in part, are normatively referenced in this document and are indispensable for its application. For dated references, only the edition cited applies. For undated references, the latest edition of the referenced document (including any amendments) applies.

EN 50607, *Satellite signal distribution over a single coaxial cable - Second generation*

3 Terms, definitions and abbreviations

3.1 Terms and definitions

For the purposes of this document, the terms and definitions given in EN 50607 apply.

3.2 Abbreviations

For the purposes of this document, the abbreviations given in EN 50607 apply.

4 Standard applications

4.1 General note for all application examples

The following examples show block diagrams for one user band only. For more user bands, switch matrix and converter blocks can be multiplied accordingly.

Function blocks are simplified (no pre-selection filters etc.).

Data format is simplified (offset of 100 MHz in transmitted data is ignored).

Only analogue converters are shown, the examples can be adapted for dCSS solutions accordingly.

Basically, the examples describe applications with:

a) Universal LNB (see 4.2);

b) Multi-switch with feed by Quatro LNB (see 4.3);

c) LNB´s with wideband architecture (see 4.4.);

d) Multi-switch with wideband feed see (4.5);

e) Two satellite reception (see 4.6);

f) C-Band LNB´s (see 4.7);

g) Universal Ka Band LNB with dual wideband hardware (see 4.8);

h) Multi-switch with feed by LNB (dual wideband feed) in 4.9;

i) Ka Band LNB (ultra-wideband hardware) in 4.10.

This is a free page sample. Access the full version online.

4.2 SCD2 Universal LNB

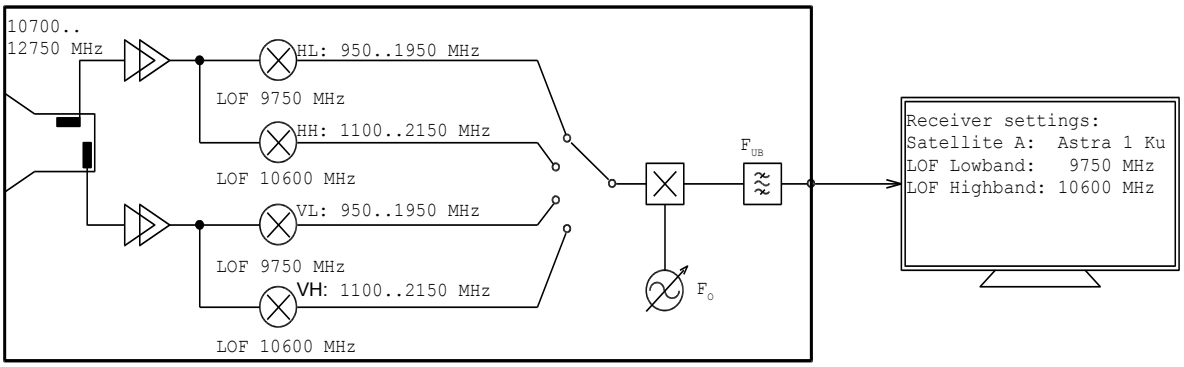

Figure 1 — SCD2 Universal- LNB — Example for Ku Band

This example shows a typical Universal LNB with a bank switch and one channel-stacking converter. The bank switch is controlled using the SCD2 bits .0 (“band”) and .1 (“polarity”). The oscillator of the CSS converter is controlled by requested IF frequency from receiver plus frequency of the user band. In the receiver, the LOFs are set accordingly to the real LOFs of the LNB.

EXAMPLE Receiver is set to UB1 with 1 280 MHz. Desired program is 11 494 MHz, low band, horizontal. Receiver is configured to LOF 9 750 MHz for low band. Receiver calculates IF = 11 494 MHz – 9 750 MHz = 1 744 MHz. This information is sent in SCD2 data format. To convert 1 744 MHz to 1 280 MHz, the SCD2 converter sets the oscillator to Fo = 3 024 MHz.

NOTE Concerning LNB configuration (entering of LO frequencies for Low band and High band in), the necessary configuration measures by the installer are the same as for legacy DiSEqC LNBs. The procedure described above of course is also valid for LNBs operating in other frequency bands (for example Ka Band). An application with a Universal LNB which covers a frequency range of more than 2,05 GHz (dual wideband hardware) is described in 4.8.

4.3 SCD2 Multi-switch with feed by Quatro LNB

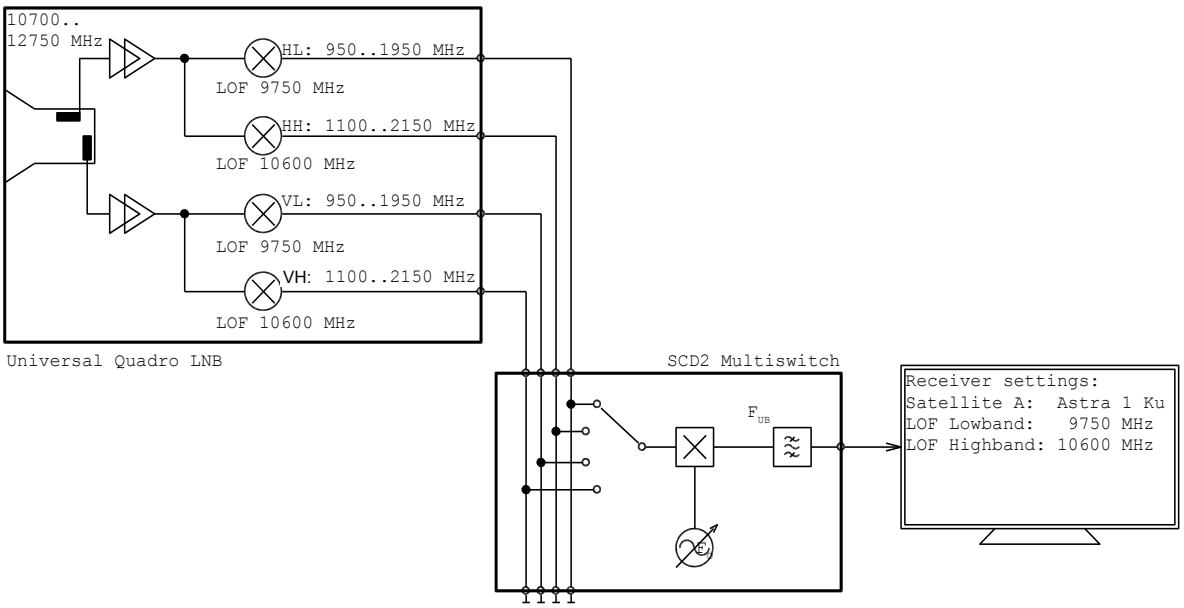

Figure 2 — SCD2 Multi-switch with standard feed by Universal LNB — Example for Ku Band

This is a free page sample. Access the full version online.

This example shows a typical application of a CSS multi-switch with a standard L-Band signal provided by a Quatro LNB. The bank switch of the CSS converter is controlled using the SCD2 bits .0 (“band”) and .1 (“polarity”). The oscillator of the CSS converter is controlled by requested IF frequency from receiver plus frequency of the user band. In the receiver, the LOFs are set accordingly to the real LOFs of the LNB.

4.4 SCD2 LNB with wideband architecture

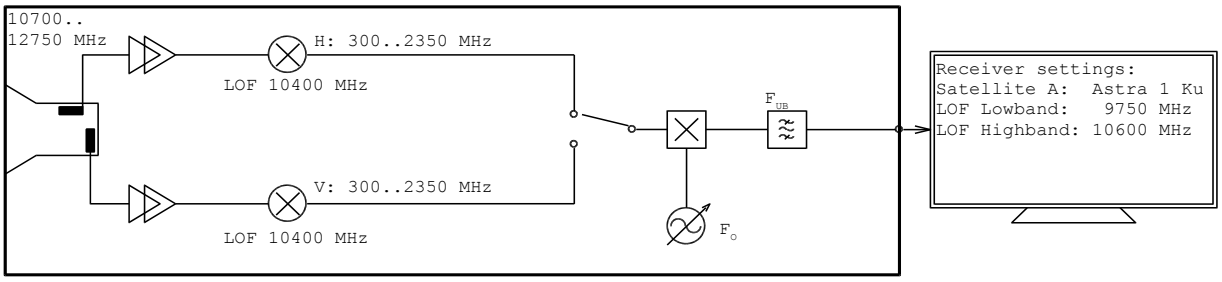

Figure 3 — SCD2 LNB with wideband architecture — Example for Ku Band

SCD2 also supports CSS LNBs using wideband architecture. In the above example, only one LOF with F = 10 400 MHz is used. Functionality of a Universal LNB with standard band architecture is emulated; therefore, the receiver does not need special settings. The polarity switch is controlled using the SCD2 bit .1 (“polarity”). A band switch is emulated by adding an offset to the frequency of the CSS conversion oscillator. The offset depends on the SCD2 bit .0 (“band”) and is - 650 MHz for low band and + 200 MHz for high band. SCD2 Universal Wide-Band LNBs using other LO frequencies than 10 400 MHz can be realised by using other offset frequencies (e.g. - 450 MHz and + 400 MHz for LOF = 10 200 MHz).

EXAMPLE 1 Receiver is set to UB1 with 1 280 MHz. Desired program is at 11 494 MHz, low band, horizontal. Receiver is configured to LOF 9 750 MHz for low band. Receiver calculates IF = 11 494 MHz – 9 750 MHz = 1 744 MHz. This information is sent in SCD2 data format. In the SCD2 converter, low band request is received, so with this wide-band LNB hardware, the desired program can be found 650 MHz lower than with standard Universal LNB hardware. To convert the required channel 1 744 MHz to 1 280 MHz, the SCD2 converter sets oscillator to Fo = 1 744 MHz – 650 MHz + 1 280 MHz = 2 374 MHz.

EXAMPLE 2 Receiver is set to UB1 with 1 280 MHz. Desired program is at 11 836 MHz, high band, horizontal. Receiver is configured to LOF 10 600 MHz for high band. Receiver calculates IF = 11 836 MHz – 10 600 MHz = 1 236 MHz. This information is sent in SCD2 data format. In the SCD2 converter, high band request is received, so with this wide-band hardware, the desired program can be found 200 MHz higher than with standard L-Band hardware. To convert the required channel 1 236 MHz to 1 280 MHz, the SCD2 converter sets oscillator to Fo = 1 236 MHz + 200 MHz + 1 280 MHz = 2 716 MHz.

NOTE Because Universal LNB emulation is used, the necessary configuration measures (entering LO frequencies in the STB menu) are equivalent to the NOTE in 4.2.

This is a free page sample. Access the full version online.

4.5 SCD2 Multi-switch with wideband feed

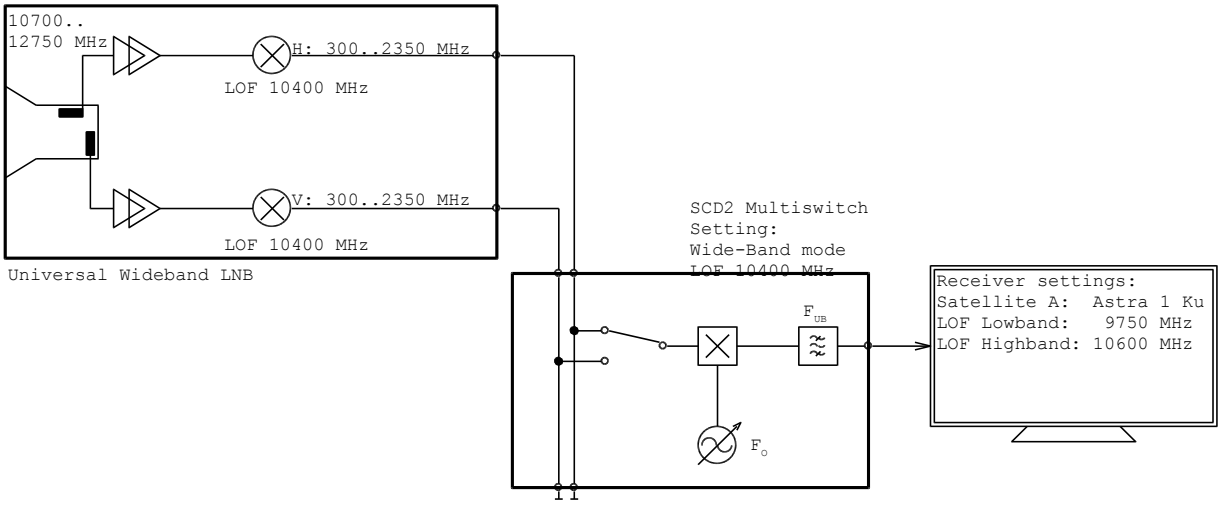

Figure 4 — SCD2 Multi-switch with wideband feed — Example for Ku Band

SCD2 also supports CSS multi-switches using wideband transmission between LNB and switch. In the above example, a LNB with only one LOF with F = 10 400 MHz is used. Signal is fed from LNB to CSS switch with one coaxial cable per polarity. In the CSS multi-switch, the functionality of a Universal LNB with standard band architecture is emulated; therefore, the receiver does not need special settings. The CSS multi-switch must be configured to wideband input mode and needs to know the LOF of the wideband LNB.

The polarity switch is controlled using the SCD2 bit .1 (“polarity”). A band switch is emulated by adding an offset to the frequency of the CSS conversion oscillator. The offset depends on the SCD2 bit .0 (“band”) and is - 650 MHz for low band and + 200 MHz for high band.

EXAMPLE 1 Receiver is set to UB1 with 1 280 MHz. Desired program is at 11 494 MHz, low band, horizontal. Receiver is configured to LOF 9 750 MHz for low band. Receiver calculates IF = 11 494 MHz – 9 750 MHz = 1 744 MHz. This information is sent in SCD2 data format. In the SCD2 converter, low band request is received, so with this wide-band hardware, the desired program can be found 650 MHz lower than with standard L-Band hardware. To convert the required channel 1 744 MHz to 1 280 MHz, the SCD2 converter sets oscillator to Fo = 1 744 MHz – 650 MHz + 1 280 MHz = 2 374 MHz.

EXAMPLE 2 Receiver is set to UB1 with 1 280 MHz. Desired program is at 11 836 MHz, high band, horizontal. Receiver is configured to LOF 10 600 MHz for high band. Receiver calculates IF = 11 836 MHz – 10 600 MHz = 1 236 MHz. This information is sent in SCD2 data format. In the SCD2 converter, high band request is received, so with this wide-band hardware, the desired program can be found 200 MHz higher than with standard L-Band hardware. To convert the required channel 1 236 MHz to 1 280 MHz, the SCD2 converter sets the oscillator to Fo = 1 236 MHz + 200 MHz + 1 280 MHz = 2 716 MHz.

This is a free page sample. Access the full version online.

4.6 SCD2 multi-switch (two satellite reception)

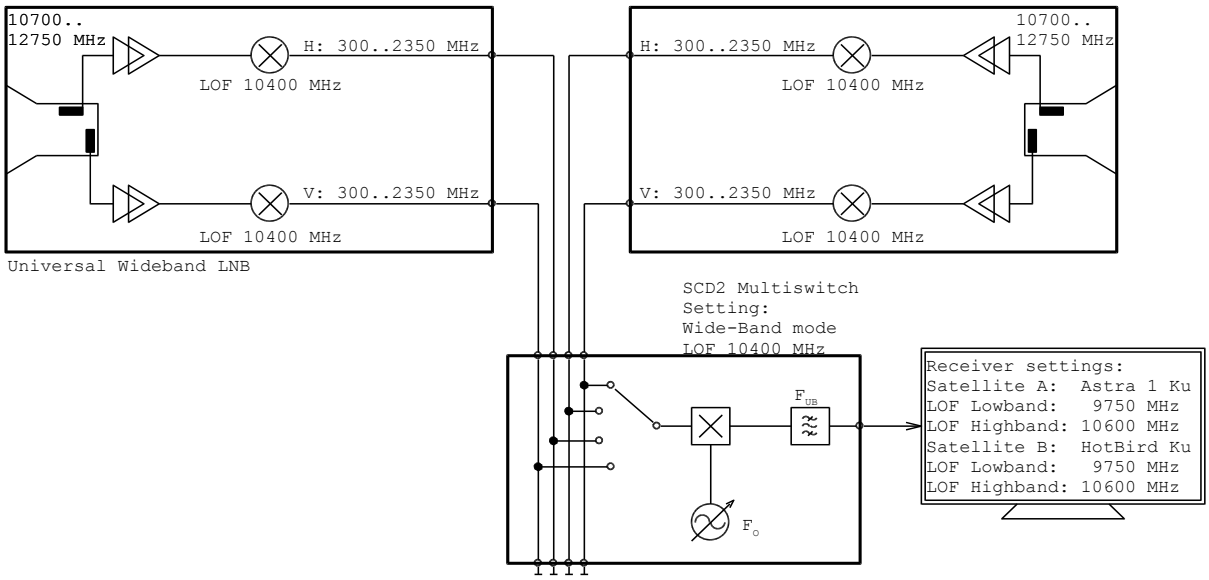

Figure 5 — SCD2 multi-switch (two-satellite reception)

Dual satellite distribution using CSS multi-switches can be realised with wide-band signal distribution between the wideband LNBs and the CSS multi-switch. The multi-switch is set to wide-band input mode and emulates standard Universal LNBs. The CSS multi-switch needs to know the LOFs of the LNBs. For the receiver, there is no special configuration required. In addition to what is described in 4.5, SCD2 bit .3 shall be used for selection of the satellite position.

4.7 SCD2 C-Band LNB

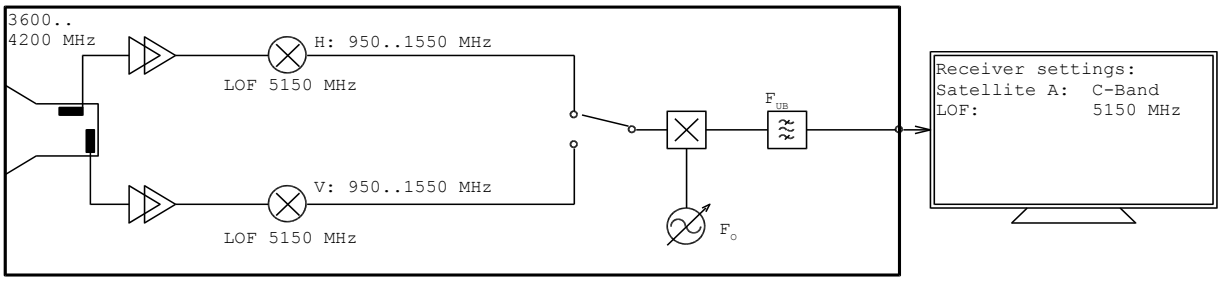

Figure 6 — SCD2 C-Band LNB

SCD2 also supports CSS C-band LNB. In the above example, a LNB with only one LOF with F = 5 150 MHz is used. The bank switch of the CSS converter is controlled using the SCD2 bit .1 (“polarity”). The oscillator of the CSS converter is controlled by requested IF frequency from receiver plus frequency of the user band. In the receiver, the LOF is set accordingly to the real LOF of the LNB. Receiver takes care of spectrum inversion as it does with a standard legacy C-Band LNB connected. The necessary installation measures (entering LO frequency in the STB menu) are the same as for legacy (Standard DiSEqC) LNBs

Due to reasons such as EMC, a LO with a different (higher) frequency might be used. This can be compensated by adding an offset to the CSS oscillator (we then have 5 150 MHz emulation mode). Also direct conversion to F_{UB} could be realised in 5 150 MHz emulation mode.

SAI GLOBAL

This is a free preview. Purchase the entire publication at the link below:

Product Page

Looking for additional Standards? Visit Intertek Inform Infostore

Learn about LexConnect, All Jurisdictions, Standards referenced in Australian legislation