This is a free page sample. Access the full version online.

NSAI Standards

Irish Standard
I.S. EN 50600-3-1:2016

Information technology - Data centre facilities and infrastructures - Part 3-1: Management and operational information

© CENELEC 2016 No copying without NSAI permission except as permitted by copyright law.

This is a free page sample. Access the full version online.

I.S. EN 50600-3-1:2016

Incorporating amendments/corrigenda/National Annexes issued since publication:

The National Standards Authority of Ireland (NSAI) produces the following categories of formal documents:

I.S. xxx: Irish Standard — national specification based on the consensus of an expert panel and subject to public consultation.

S.R. xxx: Standard Recommendation — recommendation based on the consensus of an expert panel and subject to public consultation.

SWiFT xxx: A rapidly developed recommendatory document based on the consensus of the participants of an NSAI workshop.

This document replaces/revises/consolidates the NSAI adoption of the document(s) indicated on the CEN/CENELEC cover/Foreword and the following National document(s):

NOTE: The date of any NSAI previous adoption may not match the date of its original CEN/CENELEC document.

This document is based on:	*Published:*
EN 50600-3-1:2016	2016-03-25

This document was published under the authority of the NSAI and comes into effect on:	ICS number:
2016-04-12	NOTE: If blank see CEN/CENELEC cover page

NSAI	T +353 1 807 3800	Sales:
1 Swift Square,	F +353 1 807 3838	T +353 1 857 6730
Northwood, Santry	E standards@nsai.ie	F +353 1 857 6729
Dublin 9	W NSAI.ie	W standards.ie

Údarás um Chaighdeáin Náisiúnta na hÉireann

This is a free page sample. Access the full version online.

National Foreword

I.S. EN 50600-3-1:2016 is the adopted Irish version of the European Document EN 50600-3-1:2016, Information technology - Data centre facilities and infrastructures - Part 3-1: Management and operational information

This document does not purport to include all the necessary provisions of a contract. Users are responsible for its correct application.

Compliance with this document does not of itself confer immunity from legal obligations.

In line with international standards practice the decimal point is shown as a comma (,) throughout this document.

This is a free page sample. Access the full version online.

This page is intentionally left blank

This is a free page sample. Access the full version online.

EUROPEAN STANDARD

NORME EUROPÉENNE

EUROPÄISCHE NORM

EN 50600-3-1

March 2016

ICS 35.020; 35.110; 35.160

English Version

Information technology - Data centre facilities and infrastructures - Part 3-1: Management and operational information

Technologie de l'information - Installation et infrastructures de centres de traitement de données - Partie 3-1: Informations de gestion et de fonctionnement

Informationstechnik - Einrichtungen und Infrastrukturen von Rechenzentren - Teil 3-1: Informationen für das Management und den Betrieb

This European Standard was approved by CENELEC on 2016-01-26. CENELEC members are bound to comply with the CEN/CENELEC Internal Regulations which stipulate the conditions for giving this European Standard the status of a national standard without any alteration.

Up-to-date lists and bibliographical references concerning such national standards may be obtained on application to the CEN-CENELEC Management Centre or to any CENELEC member.

This European Standard exists in three official versions (English, French, German). A version in any other language made by translation under the responsibility of a CENELEC member into its own language and notified to the CEN-CENELEC Management Centre has the same status as the official versions.

CENELEC members are the national electrotechnical committees of Austria, Belgium, Bulgaria, Croatia, Cyprus, the Czech Republic, Denmark, Estonia, Finland, Former Yugoslav Republic of Macedonia, France, Germany, Greece, Hungary, Iceland, Ireland, Italy, Latvia, Lithuania, Luxembourg, Malta, the Netherlands, Norway, Poland, Portugal, Romania, Slovakia, Slovenia, Spain, Sweden, Switzerland, Turkey and the United Kingdom.

European Committee for Electrotechnical Standardization
Comité Européen de Normalisation Electrotechnique
Europäisches Komitee für Elektrotechnische Normung

CEN-CENELEC Management Centre: Avenue Marnix 17, B-1000 Brussels

© 2016 CENELEC All rights of exploitation in any form and by any means reserved worldwide for CENELEC Members.

Ref. No. EN 50600-3-1:2016 E

This is a free page sample. Access the full version online.

Contents

Page

European foreword 4
Introduction 5
1 Scope 8
2 Normative references 8
3 Terms, definitions and abbreviations 9
3.1 Terms and definitions 9
3.2 Abbreviations 10
4 Conformance 11
5 Operational information and parameters 11
5.1 General 11
5.2 Building construction as per EN 50600-2-1 12
5.3 Power distribution as per EN 50600-2-2 12
5.4 Environmental control as per EN 50600-2-3 13
5.5 Telecommunications cabling infrastructure as per EN 50600-2-4 15
5.6 Security systems as per EN 50600-2-5 15
6 Acceptance test 15
6.1 General 15
6.2 Building construction (EN 50600-2-1) tests 16
6.3 Power distribution (EN 50600-2-2) tests 16
6.4 Environmental control (EN 50600-2-3) tests 16
6.5 Telecommunications cabling infrastructure (EN 50600-2-4) tests 17
6.6 Security systems (EN 50600-2-5) tests 17
6.7 Energy efficiency enablement tests 17
6.8 Energy efficiency strategy tests 17
6.9 Monitoring tests 17
7 Operational processes 17
7.1 General 17
7.2 Operations management 18
7.3 Incident management 19
7.4 Change management 20
7.5 Asset and configuration management 21
7.6 Capacity management 22
8 Management processes 24
8.1 General 24

This is a free page sample. Access the full version online.

8.2 Availability management 25
8.3 Security management 26
8.4 Resource management 27
8.5 Energy management 30
8.6 Product lifecycle management 33
8.7 Cost management 34
8.8 Data centre strategy 35
8.9 Service level management 37
8.10 Customer management 38
Annex A (informative) **Example for process implementation** 40
A.1 Prioritization of processes 40
A.2 Maturity 40
Annex B (normative) **Security systems** 42
B.1 Access to the data centre premises 42
B.2 Fire suppression systems 45
B.3 Management of electrical interference 46
Bibliography 47

Figures

Figure 1 — Schematic relationship between the EN 50600 standards 6
Figure 2 — Data centre management processes overview 8

Tables

Table A.1 — Prioritization of processes 40
Table A.2 — Operational levels 41

This is a free page sample. Access the full version online.

European foreword

This document (EN 50600-3-1:2016) has been prepared by CLC/TC 215 “Electrotechnical aspects of telecommunication equipment”.

The following dates are fixed:

• latest date by which this document has to be implemented at national level by publication of an identical national standard or by endorsement	(dop)	2017–01–26
• latest date by which the national standards conflicting with this document have to be withdrawn	(dow)	2019–01–26

Attention is drawn to the possibility that some of the elements of this document may be the subject of patent rights. CENELEC [and/or CEN] shall not be held responsible for identifying any or all such patent rights.

This document has been prepared under a mandate given to CENELEC by the European Commission and the European Free Trade Association.

This is a free page sample. Access the full version online.

Introduction

The unrestricted access to internet-based information demanded by the information society has led to an exponential growth of both internet traffic and the volume of stored/retrieved data. Data centres are housing and supporting the information technology and network telecommunications equipment for data processing, data storage and data transport. They are required both by network operators (delivering those services to customer premises) and by enterprises within those customer premises.

Data centres need to provide modular, scalable and flexible facilities and infrastructures to easily accommodate the rapidly changing requirements of the market. In addition, energy consumption of data centres has become critical both from an environmental point of view (reduction of carbon footprint) and with respect to economic considerations (cost of energy) for the data centre operator.

The implementation of data centres varies in terms of:

a) purpose (enterprise, co-location, co-hosting, or network operator facilities);

b) security level;

c) physical size;

d) accommodation (mobile, temporary and permanent constructions).

The needs of data centres also vary in terms of availability of service, the provision of security and the objectives for energy efficiency. These needs and objectives influence the design of data centres in terms of building construction, power distribution, environmental control and physical security. Effective management and operational information is required to monitor achievement of the defined needs and objectives.

This series of European Standards specifies requirements and recommendations to support the various parties involved in the design, planning, procurement, integration, installation, operation and maintenance of facilities and infrastructures within data centres. These parties include:

1) owners, facility managers, ICT managers, project managers, main contractors;

2) architects, consultants, building designers and builders, system and installation designers;

3) facility and infrastructure integrators, suppliers of equipment;

4) installers, maintainers.

At the time of publication of this European Standard, the EN 50600 series currently comprises the following standards:

— EN 50600-1, *Information technology — Data centre facilities and infrastructures — Part 1: General concepts*;

— EN 50600-2-1, *Information technology — Data centre facilities and infrastructures — Part 2-1: Building construction*;

— EN 50600-2-2, *Information technology — Data centre facilities and infrastructures — Part 2-2: Power distribution*;

— EN 50600-2-3, *Information technology — Data centre facilities and infrastructures — Part 2-3: Environmental control*;

This is a free page sample. Access the full version online.

— EN 50600-2-4, *Information technology — Data centre facilities and infrastructures — Part 2-4: Telecommunications cabling infrastructure*;

— EN 50600-2-5, *Information technology — Data centre facilities and infrastructures — Part 2-5: Security systems*;

— EN 50600-3-1, *Information technology — Data centre facilities and infrastructures — Part 3-1: Management and operational information*;

— FprEN 50600-4-1, *Information technology — Data centre facilities and infrastructures — Part 4-1: Overview of and general requirements for key performance indicators*;

— FprEN 50600-4-2, *Information technology — Data centre facilities and infrastructures — Part 4-2: Power Usage Effectiveness*;

— FprEN 50600-4-3, *Information technology — Data centre facilities and infrastructures — Part 4-3: Renewable Energy Factor*;

— CLC/TR 50600-99-1, *Information technology — Data centre facilities and infrastructures — Part 99-1: Recommended practices for energy management*.

The inter-relationship of the standards within the EN 50600 series is shown in Figure 1.

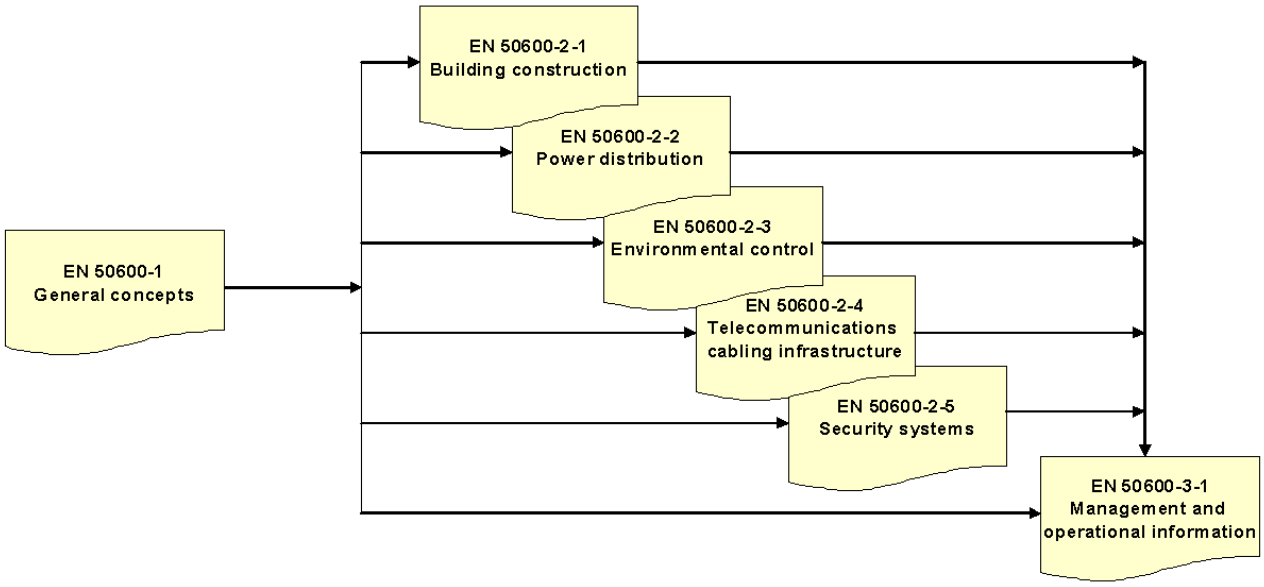

Figure 1 — Schematic relationship between the EN 50600 standards

EN 50600-2-X standards specify requirements and recommendations for particular facilities and infrastructures to support the relevant classification for “availability”, “physical security” and “energy efficiency enablement” selected from EN 50600-1.

EN 50600-3-X documents specify requirements and recommendations for data centre operations, processes and management.

This European Standard addresses the operational and management information (in accordance with the requirements of EN 50600-1). A data centre’s primary function typically is to house large quantities of computer and telecommunications hardware which affects the construction, operation, and physical security. Most of the data centres may impose special security requirements. Therefore, the planning of a data centre by the designer and the various engineering disciplines that will assist in the planning and implementation of the design of the data centre i.e. electrical, mechanical, security, etc. shall be carried out in cooperation with

This is a free page sample. Access the full version online.

the IT and telecommunications personnel, network professionals, the facilities manager, the IT end users, and any other personnel involved.

This European Standard is intended for use by and collaboration between facility managers, ICT managers, and main contractors.

This series of European Standards does not address the selection of information technology and network telecommunications equipment, software and associated configuration issues.

This is a free page sample. Access the full version online.

1 Scope

This European Standard specifies processes for the management and operation of data centres. The primary focus of this standard is the operational processes necessary to deliver the expected level of resilience, availability, risk management, risk mitigation, capacity planning, security and energy efficiency.

The secondary focus is on management processes to align the actual and future demands of users. Figure 2 shows an overview of related processes.

The transition from planning and building to operation of a data centre is considered as part of the acceptance test process in Clause 6.

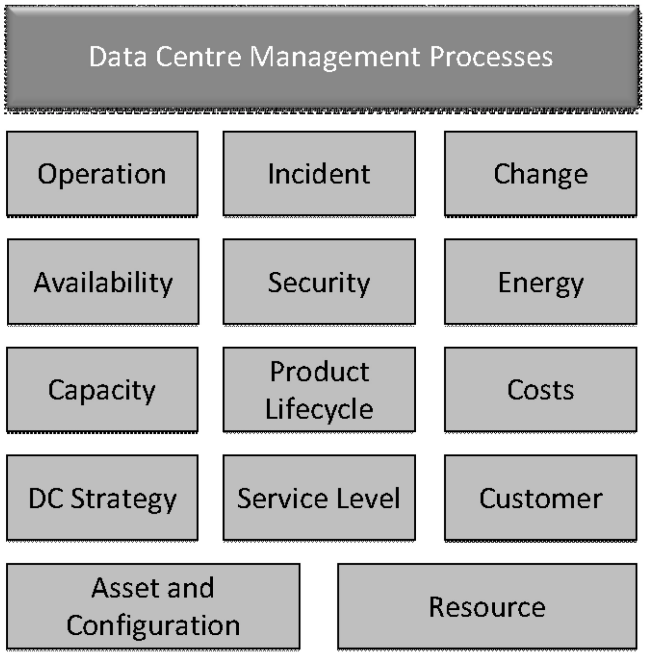

Figure 2 — Data centre management processes overview

NOTE 1 Only processes specific for data centres are in the scope of this document. Business processes like people management, financial management, etc. are out of scope.

NOTE 2 Specific skill sets are required of those working in and operating a data centre.

2 Normative references

The following documents, in whole or in part, are normatively referenced in this document and are indispensable for its application. For dated references, only the edition cited applies. For undated references, the latest edition of the referenced document (including any amendments) applies.

EN 50600-1:2012, *Information technology — Data centre facilities and infrastructures — Part 1: General concepts*

EN 50600-2 (all parts), *Information technology — Data centre facilities and infrastructures*

SAI GLOBAL

This is a free preview. Purchase the entire publication at the link below:

Product Page

Looking for additional Standards? Visit Intertek Inform Infostore

Learn about LexConnect, All Jurisdictions, Standards referenced in Australian legislation